How HIL impacts Power Electronics Control Development and Quality Assurance

Marko Vekic

Typhoon **HIL**, Inc.

“Traditional” way vs. HIL approach

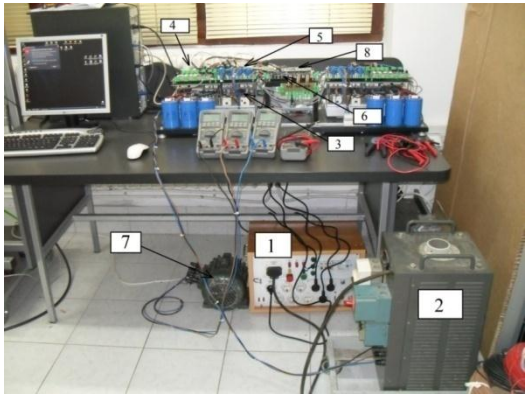

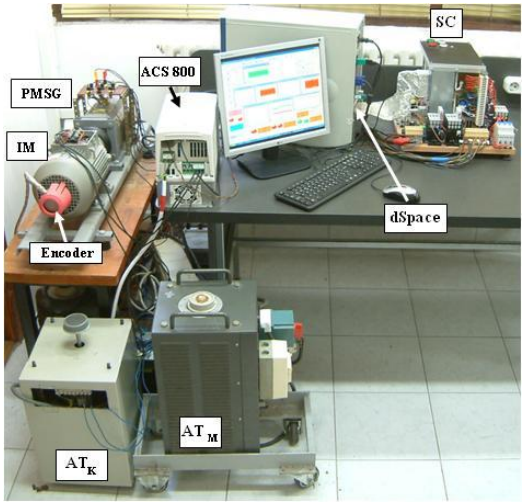

VS

Traditional way

- Feasibility study – Offline simulations

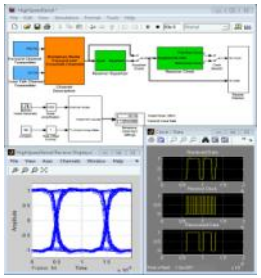

- Development – Laboratory test bench

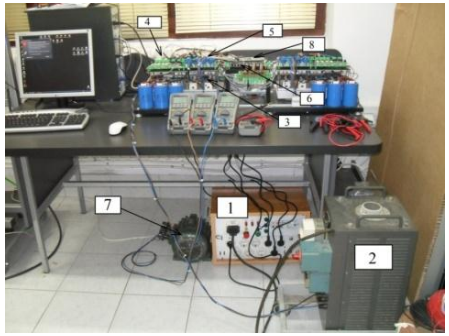

- Testing, end of line testing - Prototype

Traditional way issues:

- Changes in system parameters – HW changes
- Tests are time consuming
- Repeatability is limited
- Risk of hardware damage
- Test bench model is only partially “scaled”
- It is hard to achieve the same p.u. values

“scaled”

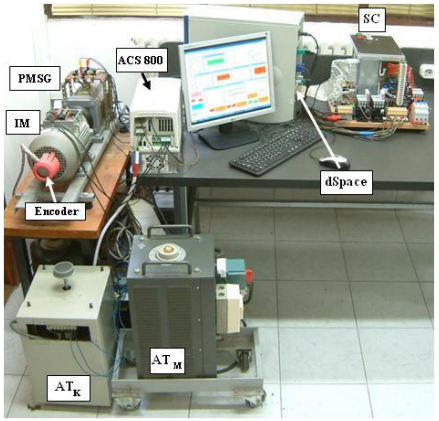

HIL way

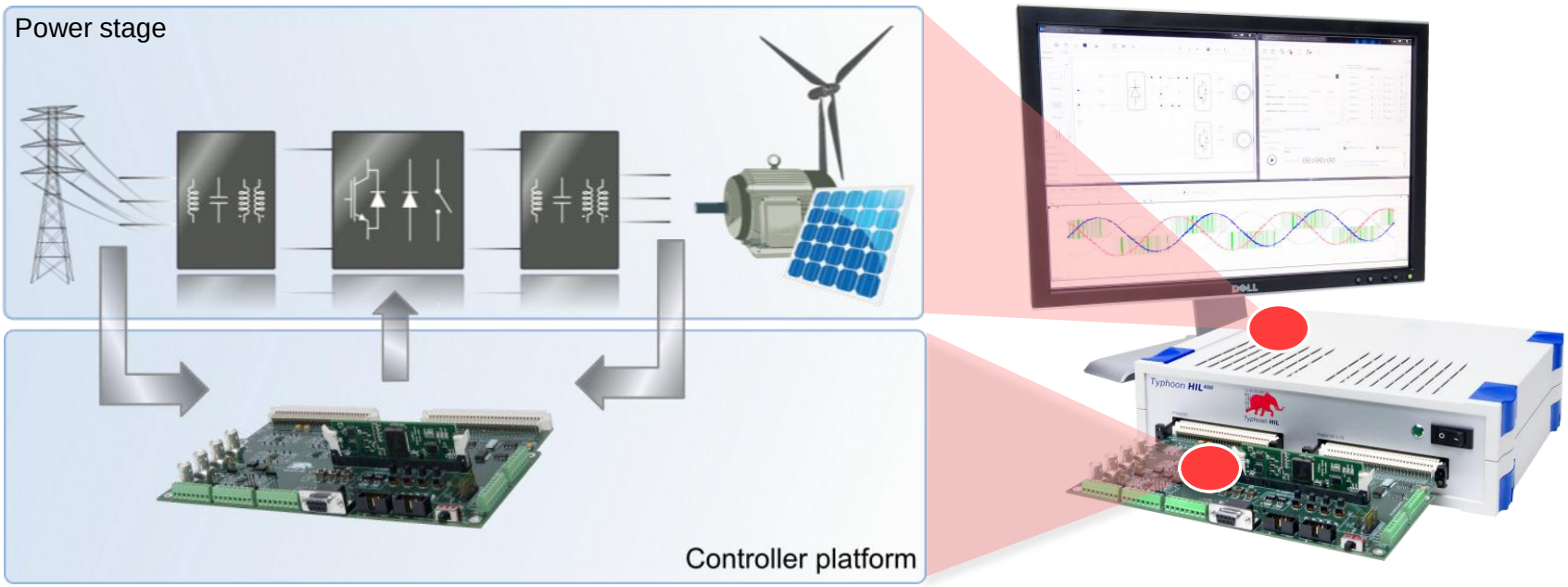

- Controller shouldn't see the difference whether it controls the real PE system or HIL emulator

Typhoon vision for power electronics testing

accelerating the pace of power electronics development

Final testing

*Typhoon **HIL***

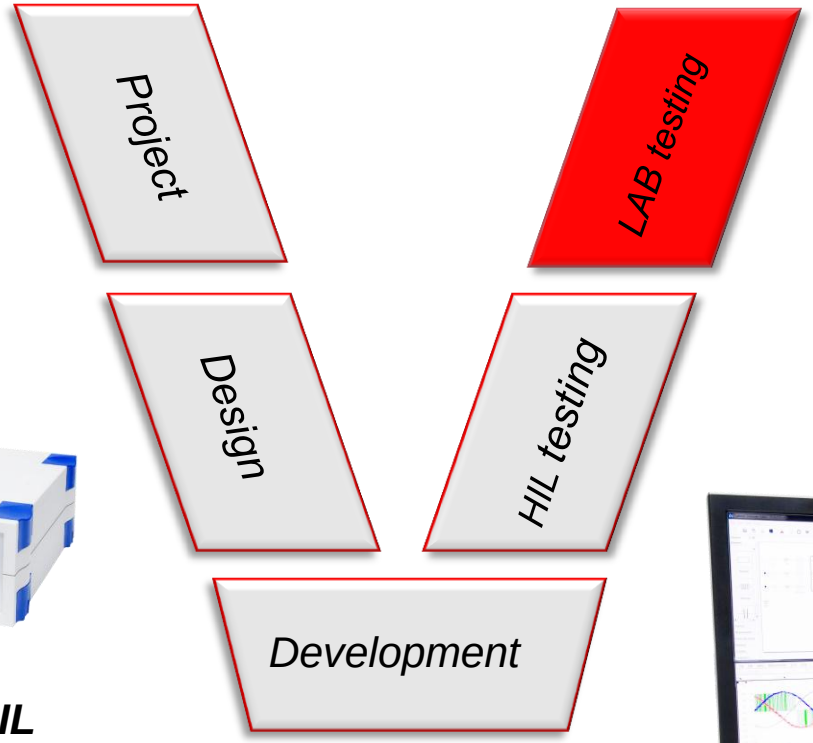

*Typhoon **HIL***

HIL Prerequisites and Features

- Fidelity
- Ease of use
- Flexibility

HIL400 Fidelity test setup

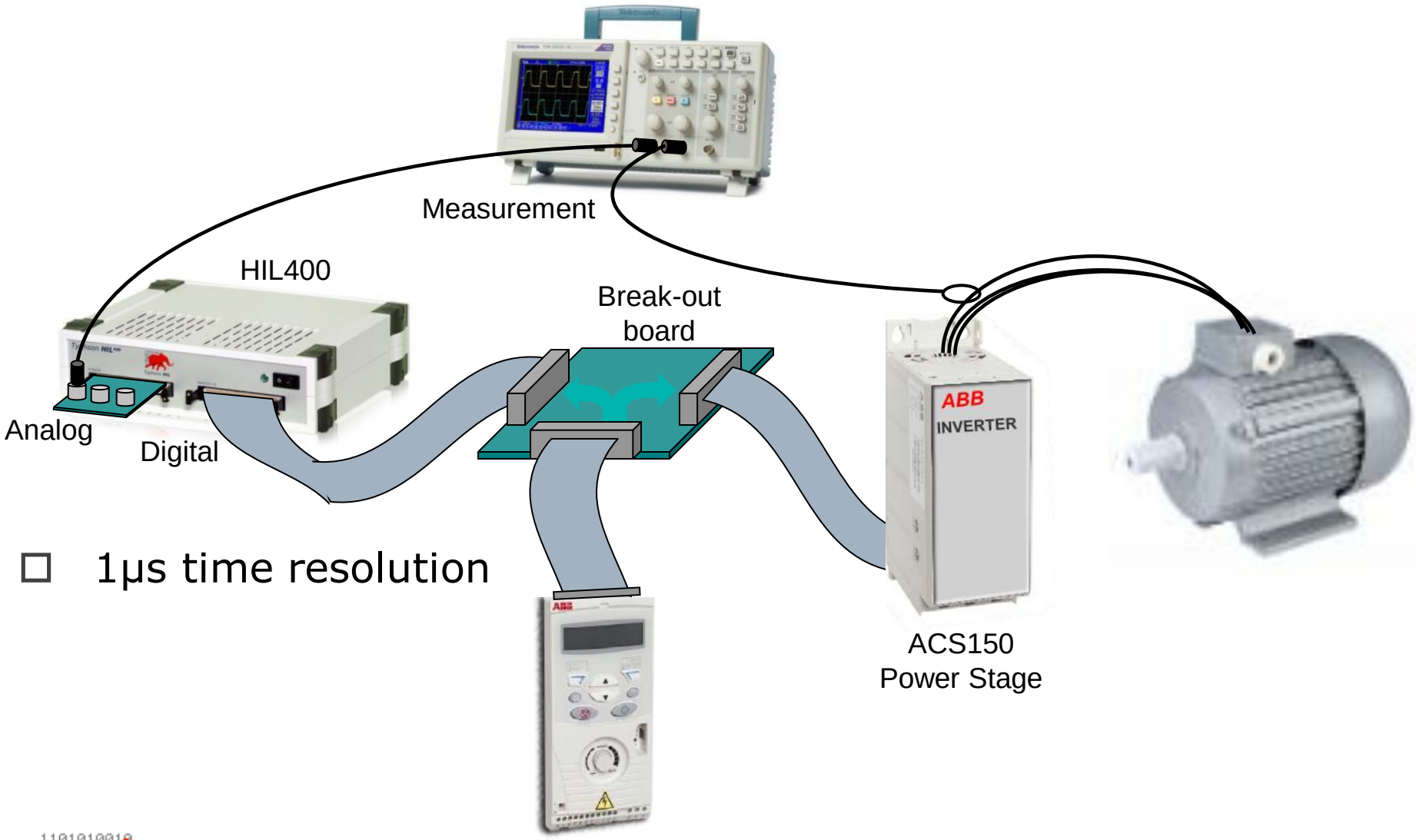

- 1μs time resolution

Experimental and measurement results

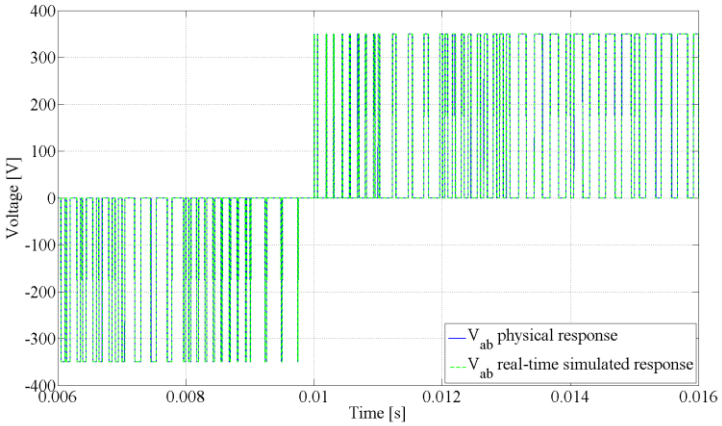

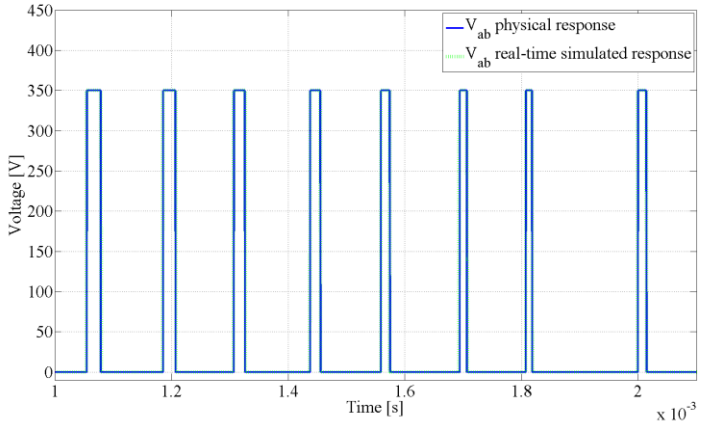

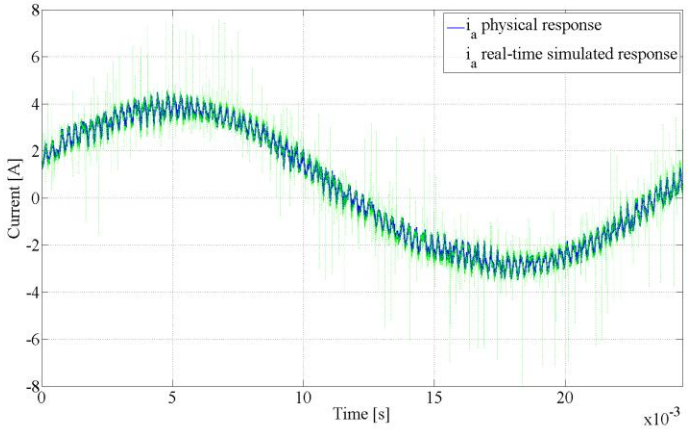

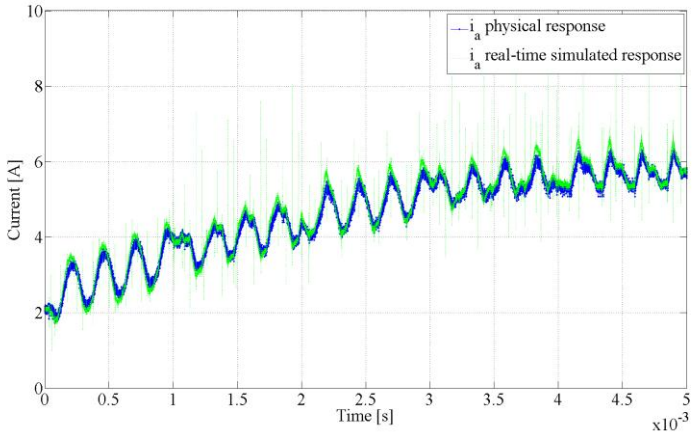

- Comparison of experimental and measurement results: line voltage and phase current

HIL400 ease of use

Schematic Editor

↓

Circuit Compiler

↓

HIL Control Panel

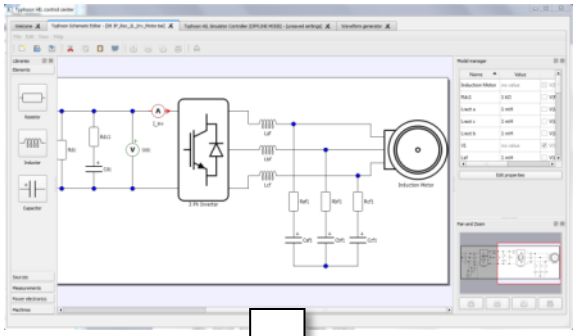

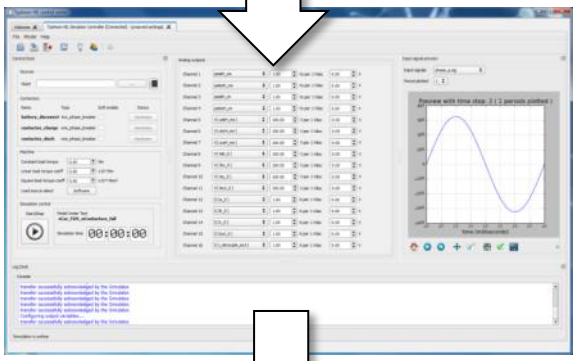

HIL^{400} flexibility

- *Tool chain support for*
  - 2 and 3 level switching blocks
  - Contactors, voltage and current sources
  - RLC, coupled inductors, transformers
  - Machines , PV, batteries, super capacitors (data sheet models)
- *Hardware*
  - IO system with:

    32 DI + 32 DO + 16 AO + 8 AI
- *Accessories*
  - Controllers, IO interface boards, controller apps

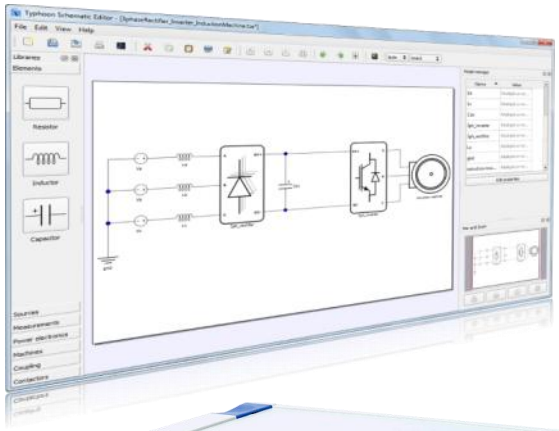

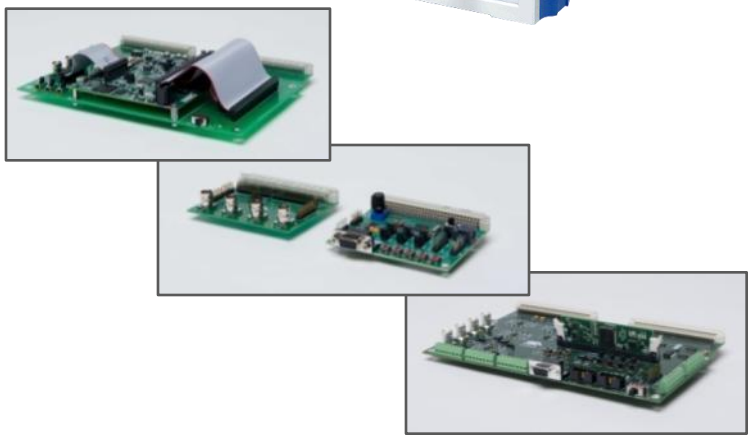

Use case #1: EV and HV Drives

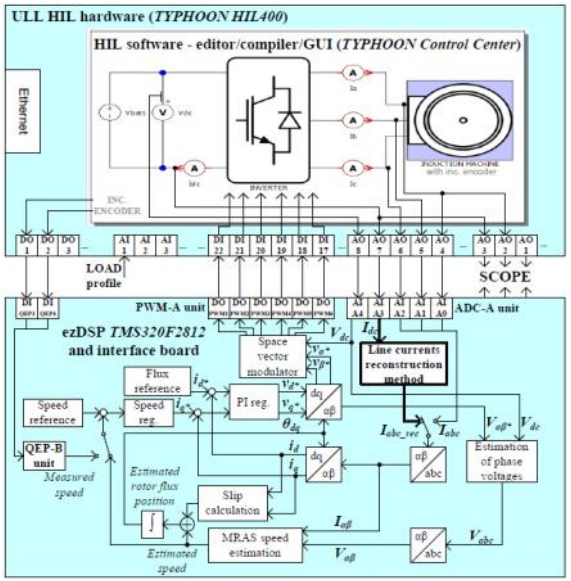

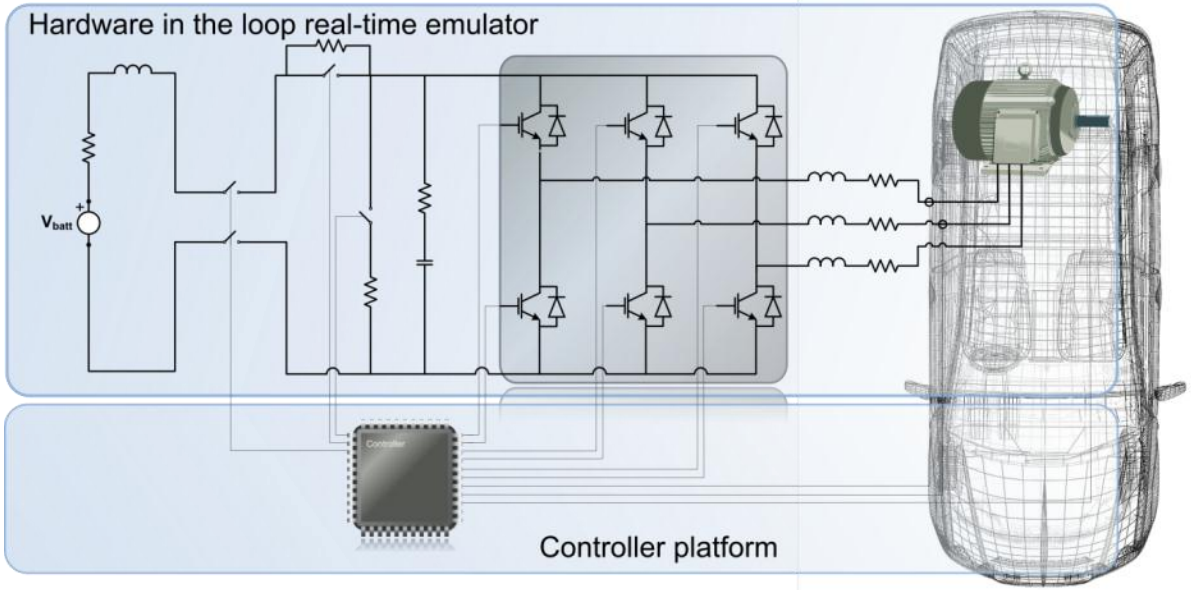

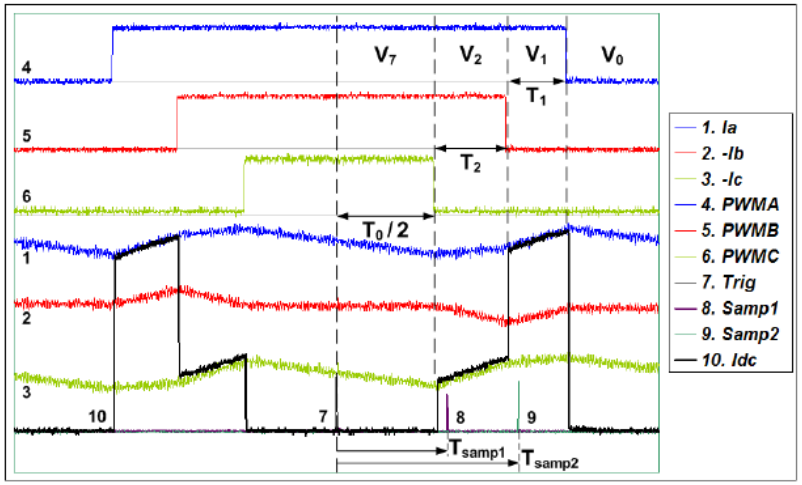

Use case #2: Grid Scale Energy Storage & FACTS

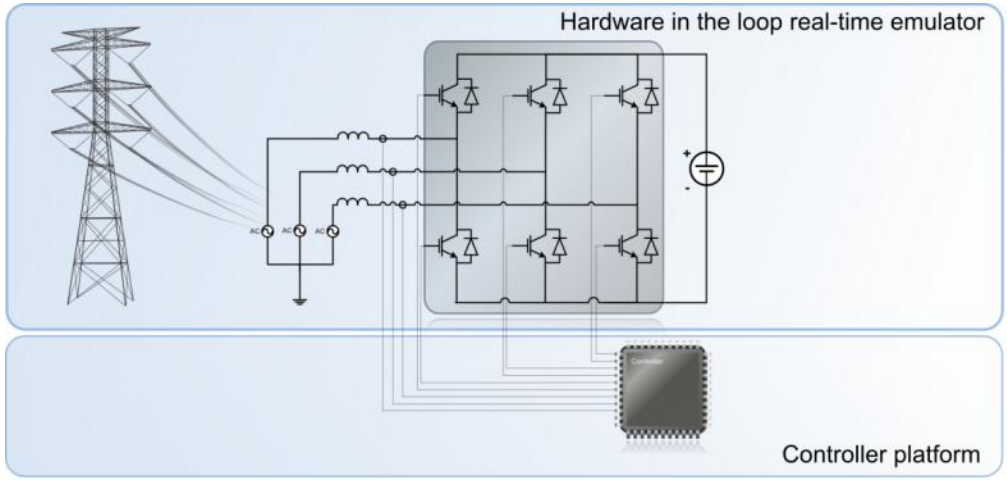

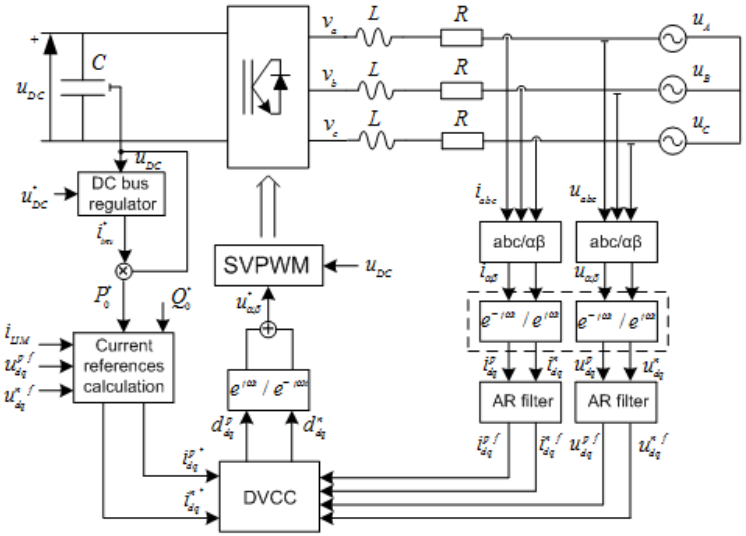

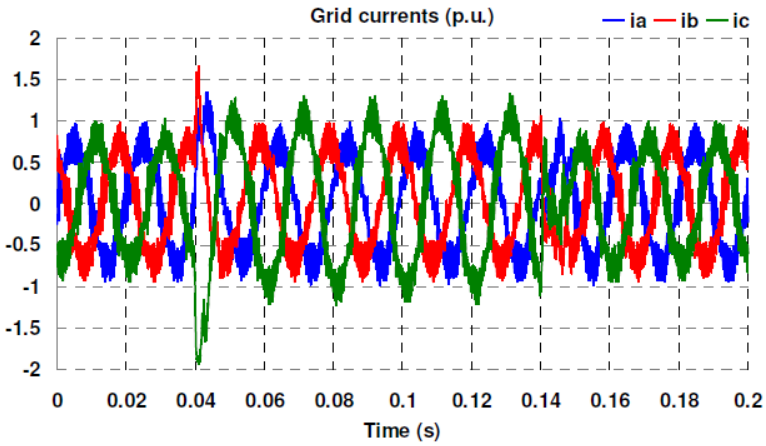

Fig. 16 Grid currents in original domain – DVCC–CL – HIL experimental results

Use case #3: PM Converter for wind turbine

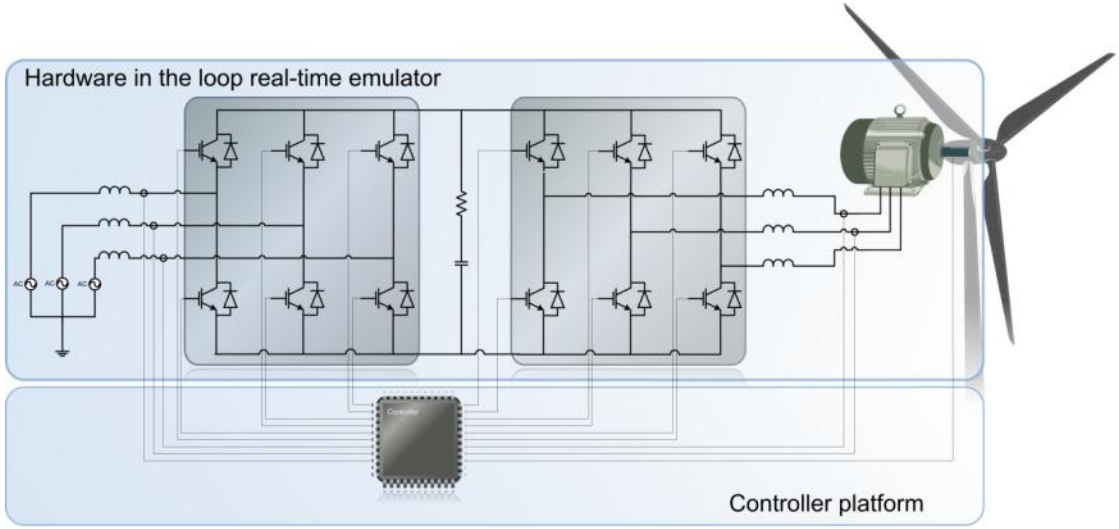

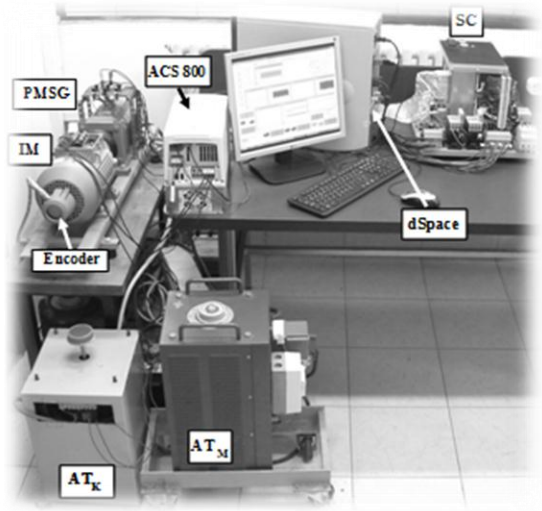

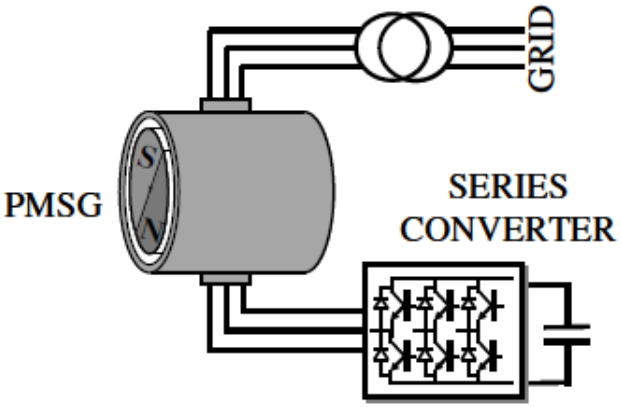

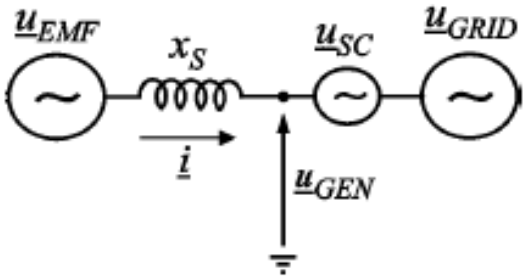

Use case #4: 700kVA AC Power Supply

- Distribution Transformers testing

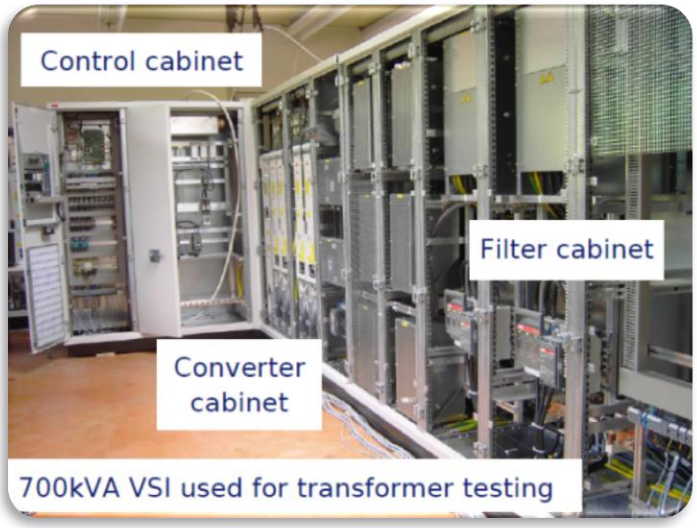

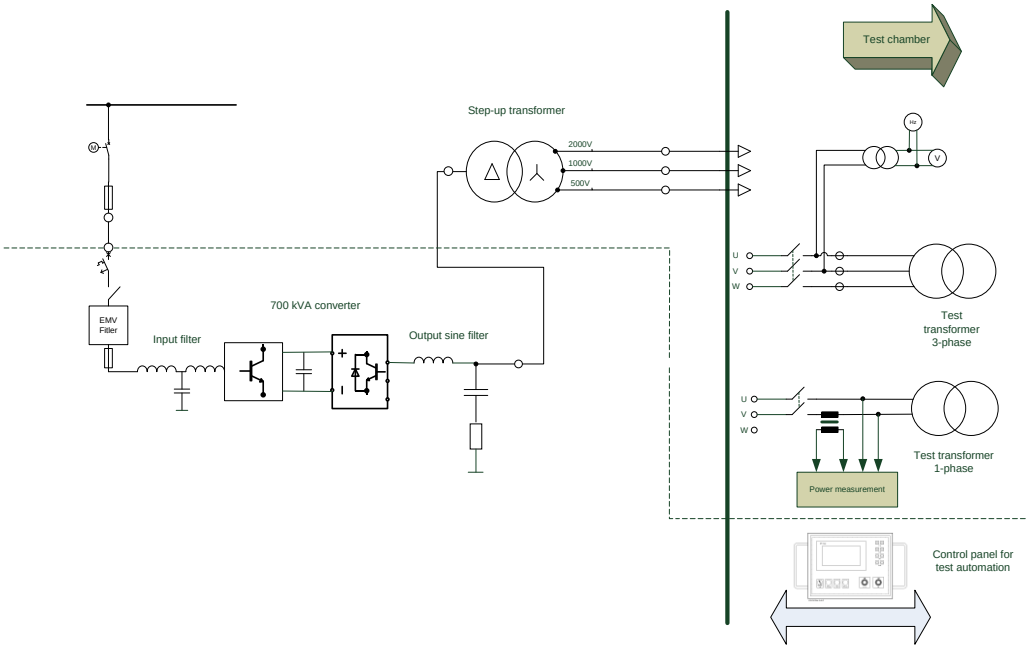

Use case #5: Grid connected PV generation

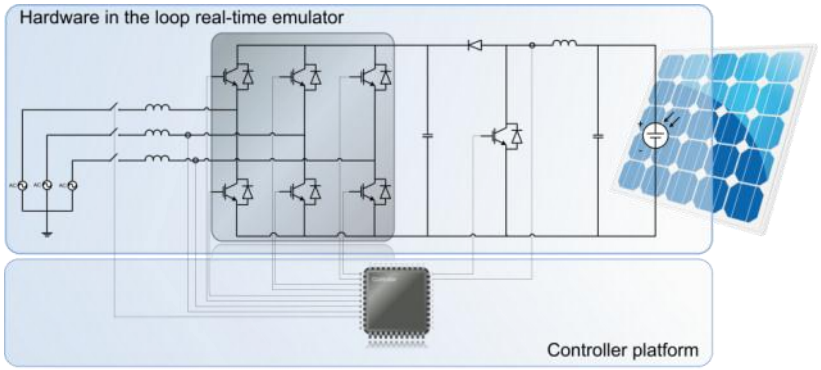

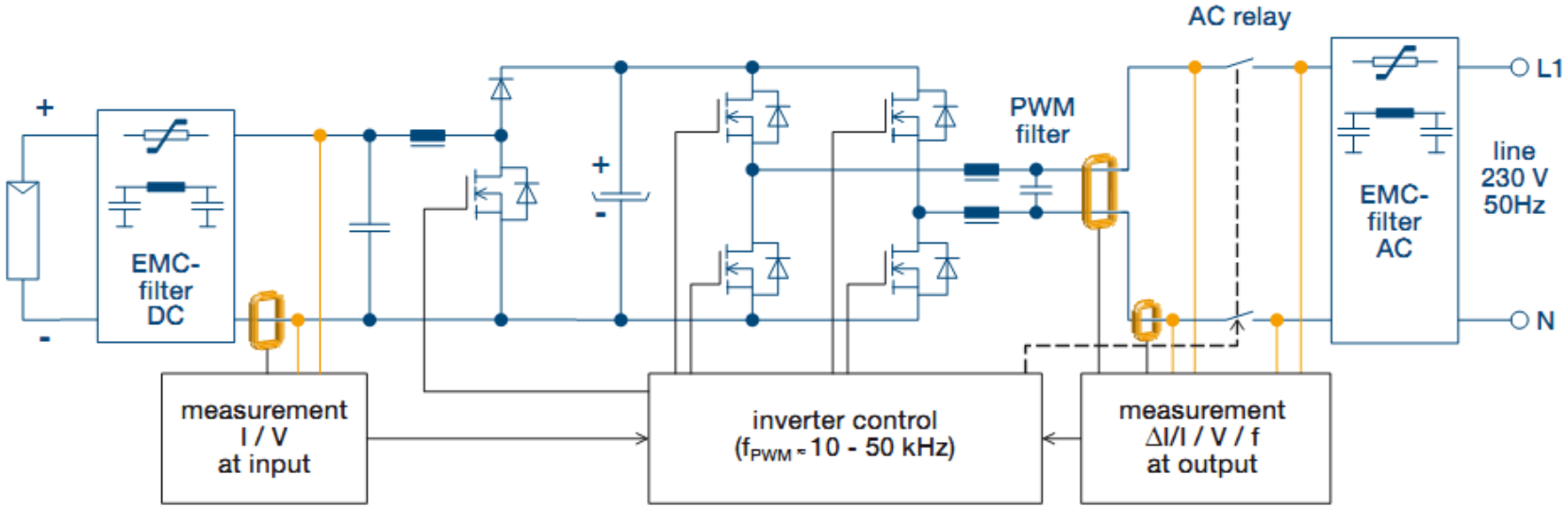

What HIL technology brings?

- ☐ Focus
- ☐ Fidelity
- ☐ Safety
- ☐ Efficiency
- ☐ Saves money

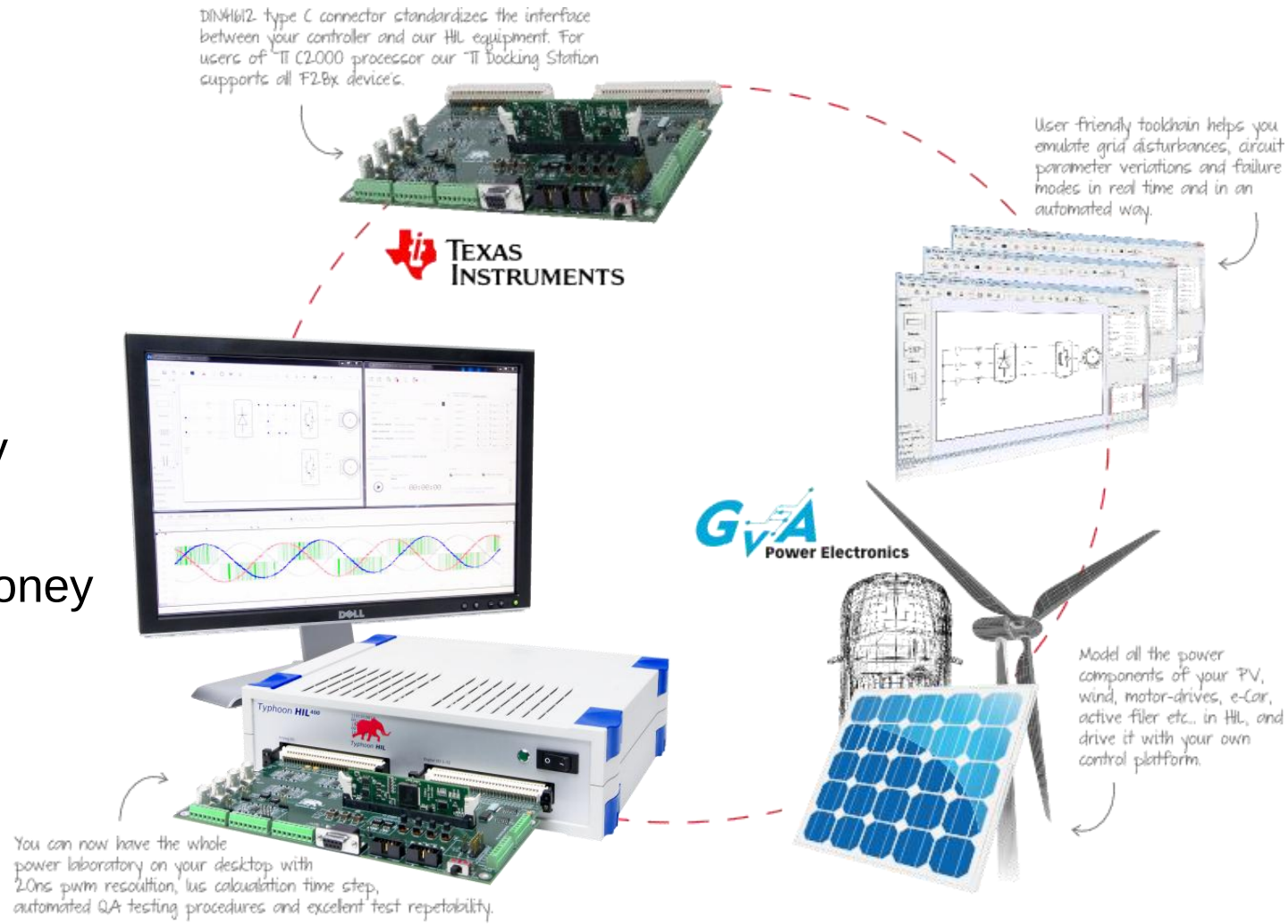

- Thank you for your attention

Marko Vekić
vekmar@typhoon-hil.ch
www.typhoon-hil.ch
+1 617 774 7577
+381 21 421617