Born and Bred in Bedfordshire- Infiniti Emerg-e and Nissan Connect 2

BOLD DESIGN, SMART TECHNOLOGY

26 September 2012

David Moss

Vice President, Vehicle Design & Development,
Nissan Technical Centre Europe

Infiniti Emerg-e Range Extender EV Prototype vehicle

Range Extender EV (REEV) Vehicle

- Prototype not just a Concept
- Designed and Engineered in Europe
- Technology Strategy Board (TSB) funded partnership
- Develop new technologies and supplier base

INFINITI Emerg-e

Nissan	2 Infiniti ZEVSS demonstrator vehicles based on Lotus 414E drive system & Niche Volume build
Lotus	1 functioning 414E demonstrator vehicle, based on Evora body
Jaguar/ Landrover	JLR X351 REEV programme
EVO electric	Supply twin rotor motors (Lotus & Nissan,) Supply generator for range extender engine (all)
AXEON	Supply battery pack, including BMS (JLR)
XTRAC	Supply of gearbox for electric motors (Lotus & Nissan)

INFINITI

INFINITI Emerg-e

Technology Strategy Board

Driving Innovation

- **Designed and Engineered in Europe**
- **REEV Project NETWORK**

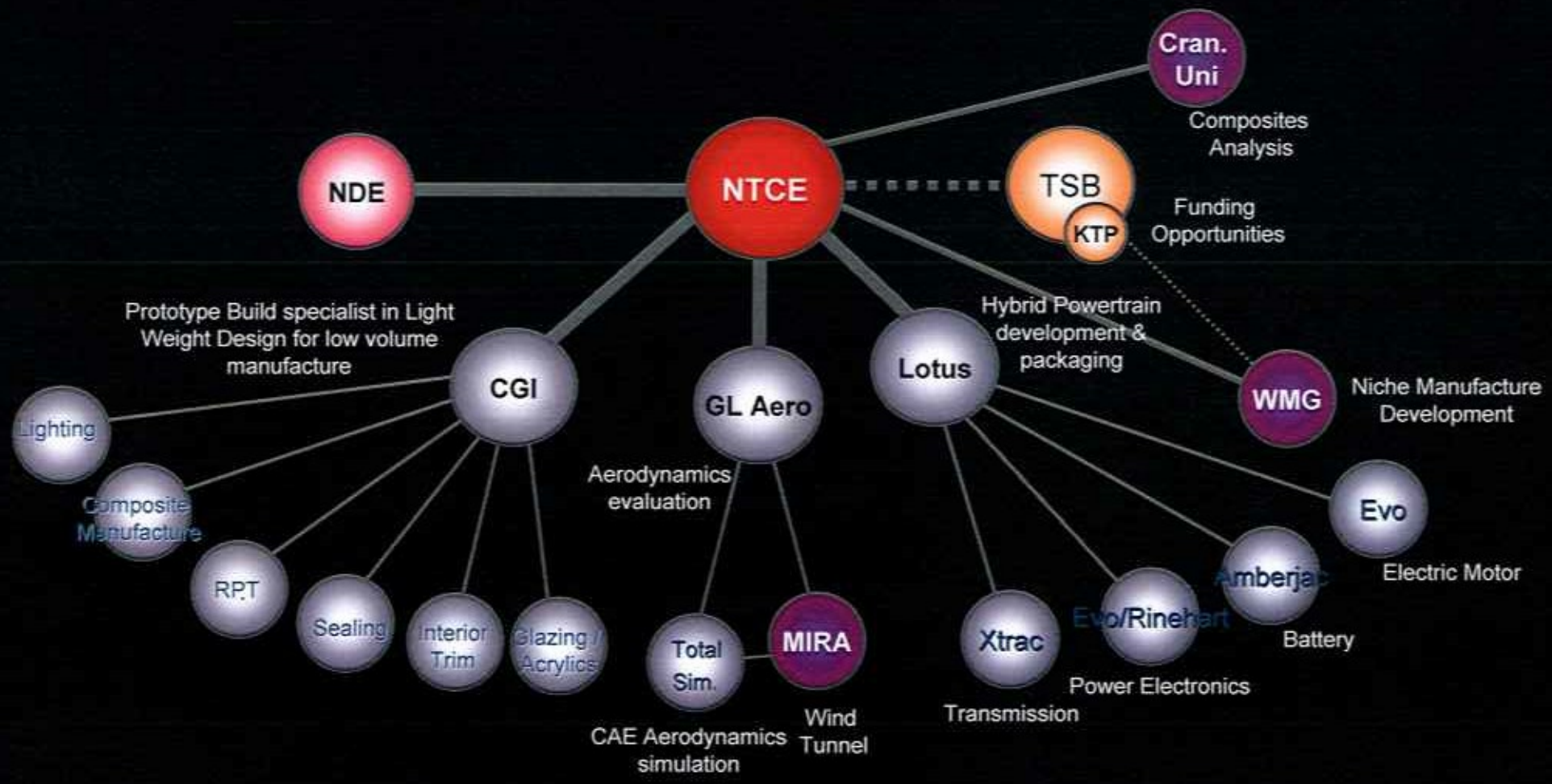

INFINITI

INFINITI Emerg-e

Technology Strategy Board

Driving Innovation

Mid Engined REEV Platform

+

Infiniti Design

■ Performance Targets

Acceleration: 0-60mph	4 seconds.
Max Speed:	130mph.
EV range:	30 miles.
Full Range:	300 miles.

Images © Group Lotus PLC

Mid Engined REEV Technology

Range Extender:	Lotus 1.2l 3 cylinder. 35kW at 3500rpm. EVO AF130 Generator unit.
Battery:	Energy: 14.8 kWh Voltage: 360V
Inverter:	4 off Rinehart PM100DX Power rating 100kW each
Motor:	EVO Electric twin AF230-3 motors. 300 kW peak power.
Gear Box:	Xtrac Single speed transmission, 4.58:1 ratio

images © Group Lotus PLC

Hybrid Powertrain Content - Range Extender & Fuel System

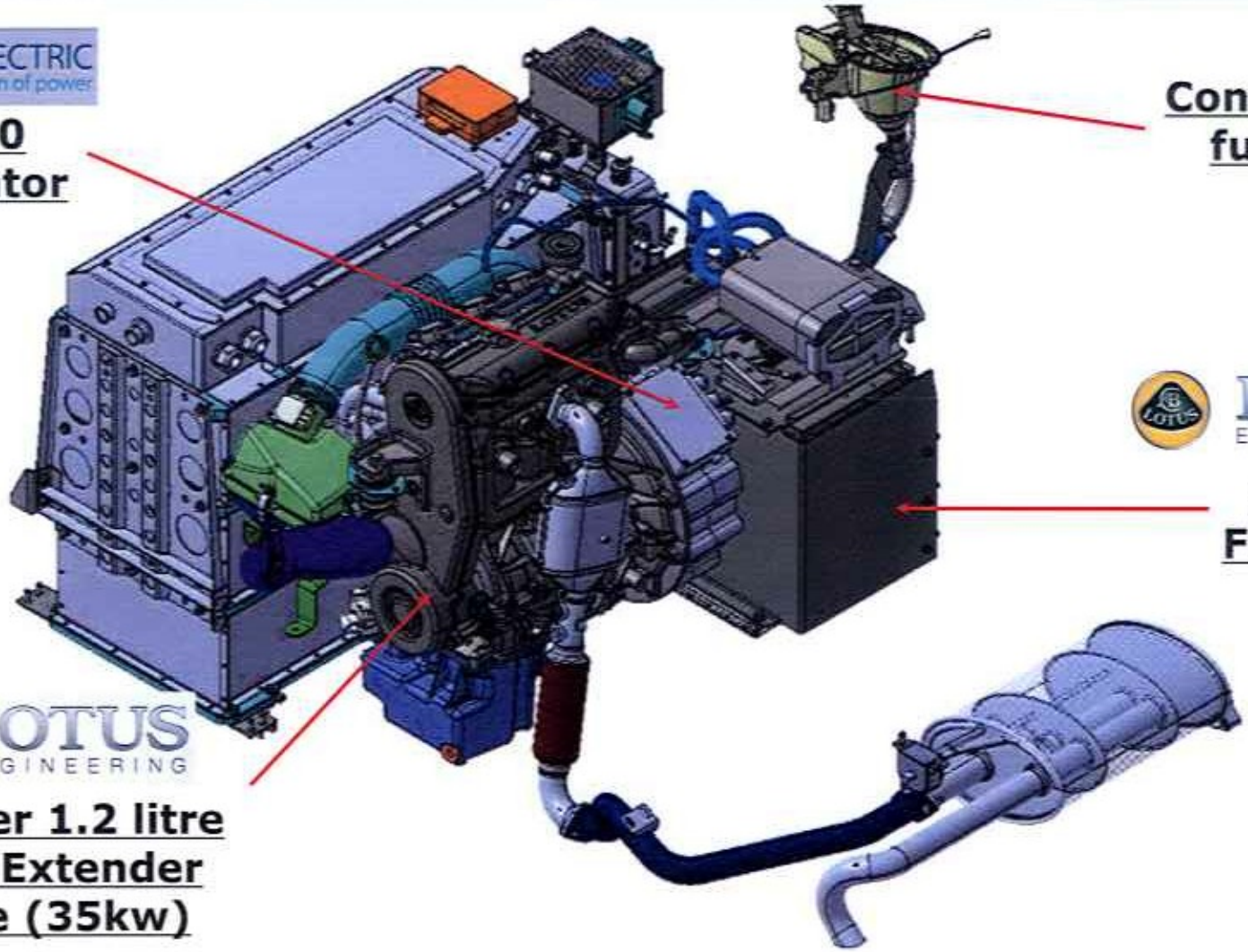

images © Group Lotus PLC

Hybrid Powertrain Content – Electric Motors

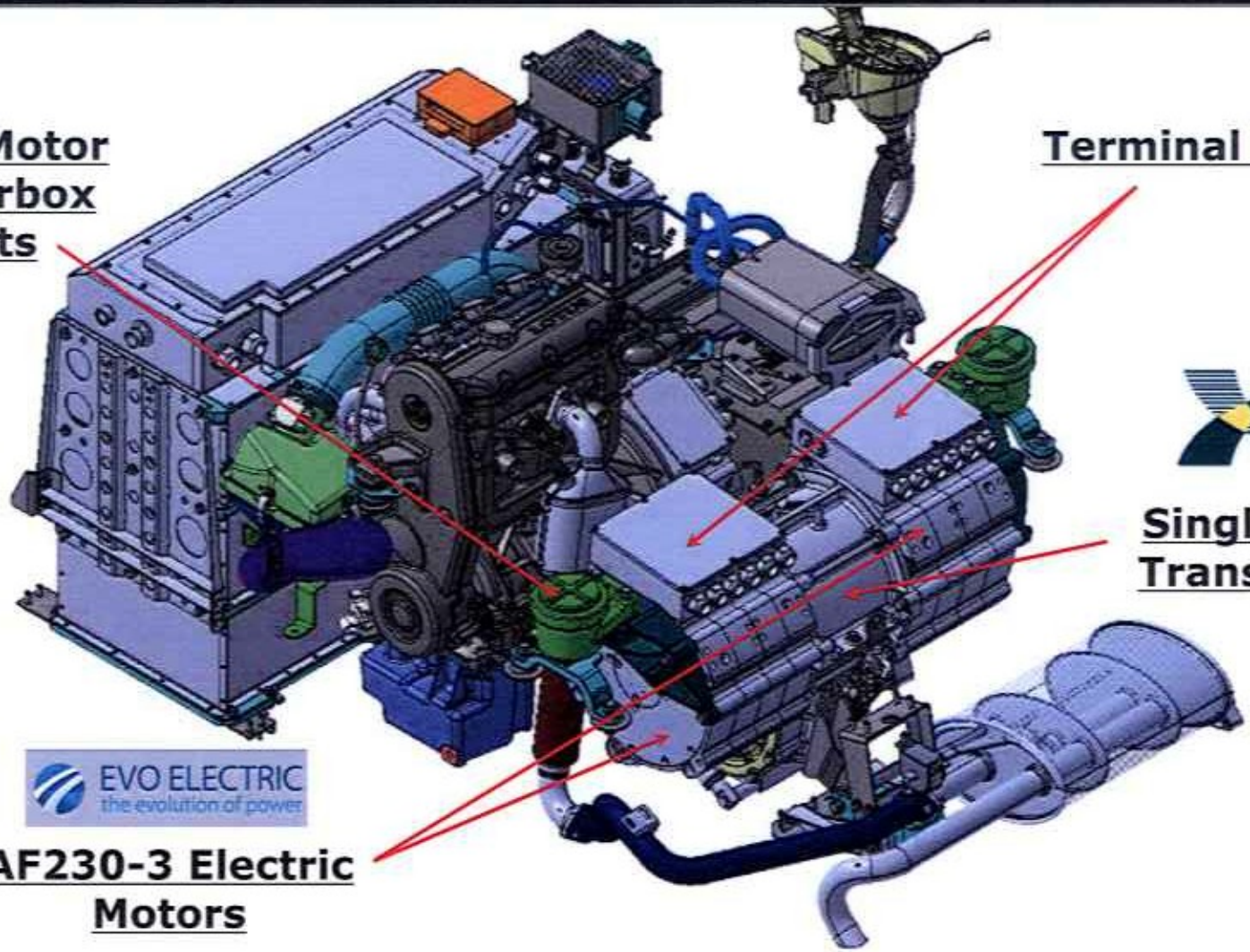

images © Group Lotus PLC

Hybrid Powertrain Content – High Voltage Electronics

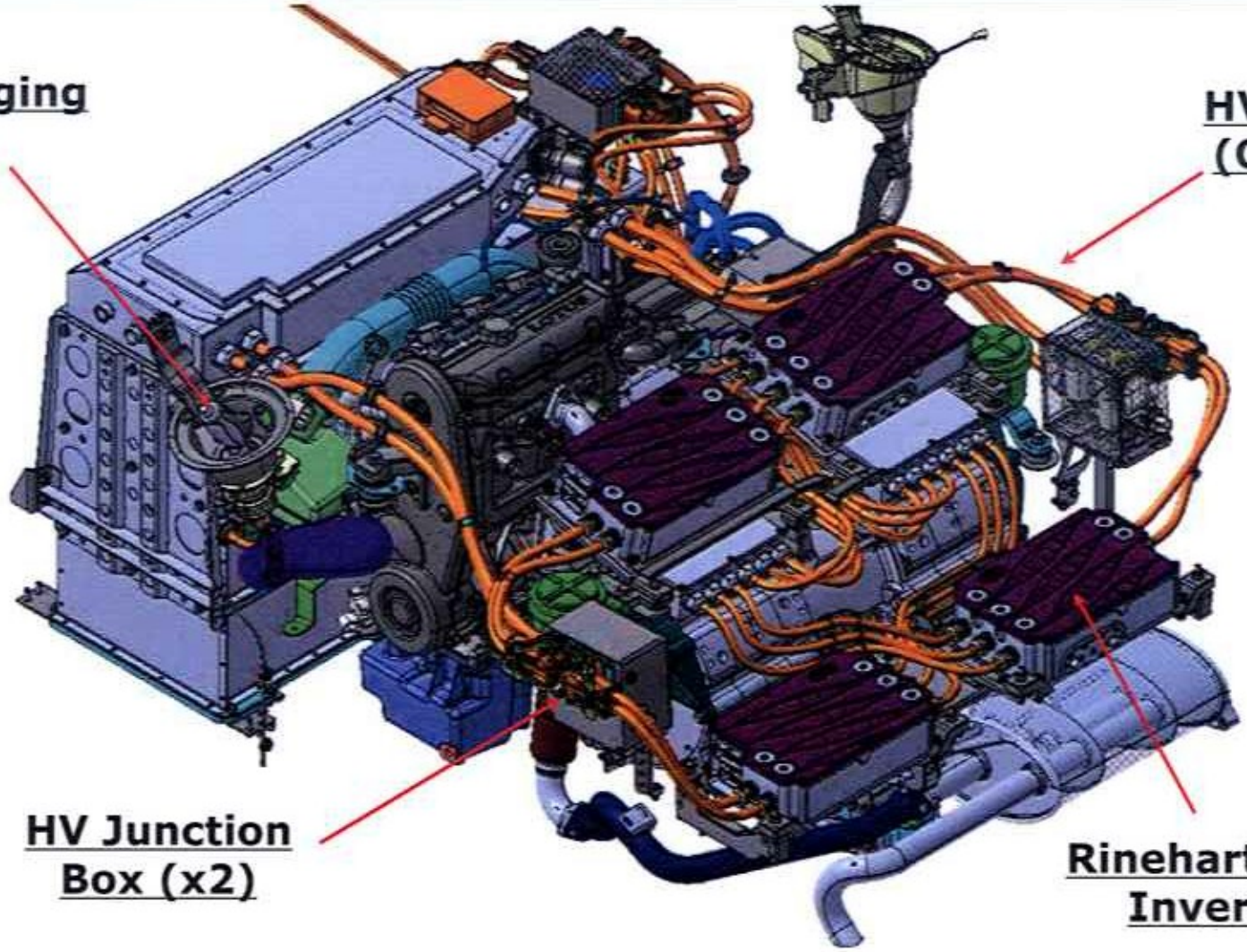

images © Group Lotus PLC

Hybrid Powertrain Content - Complete

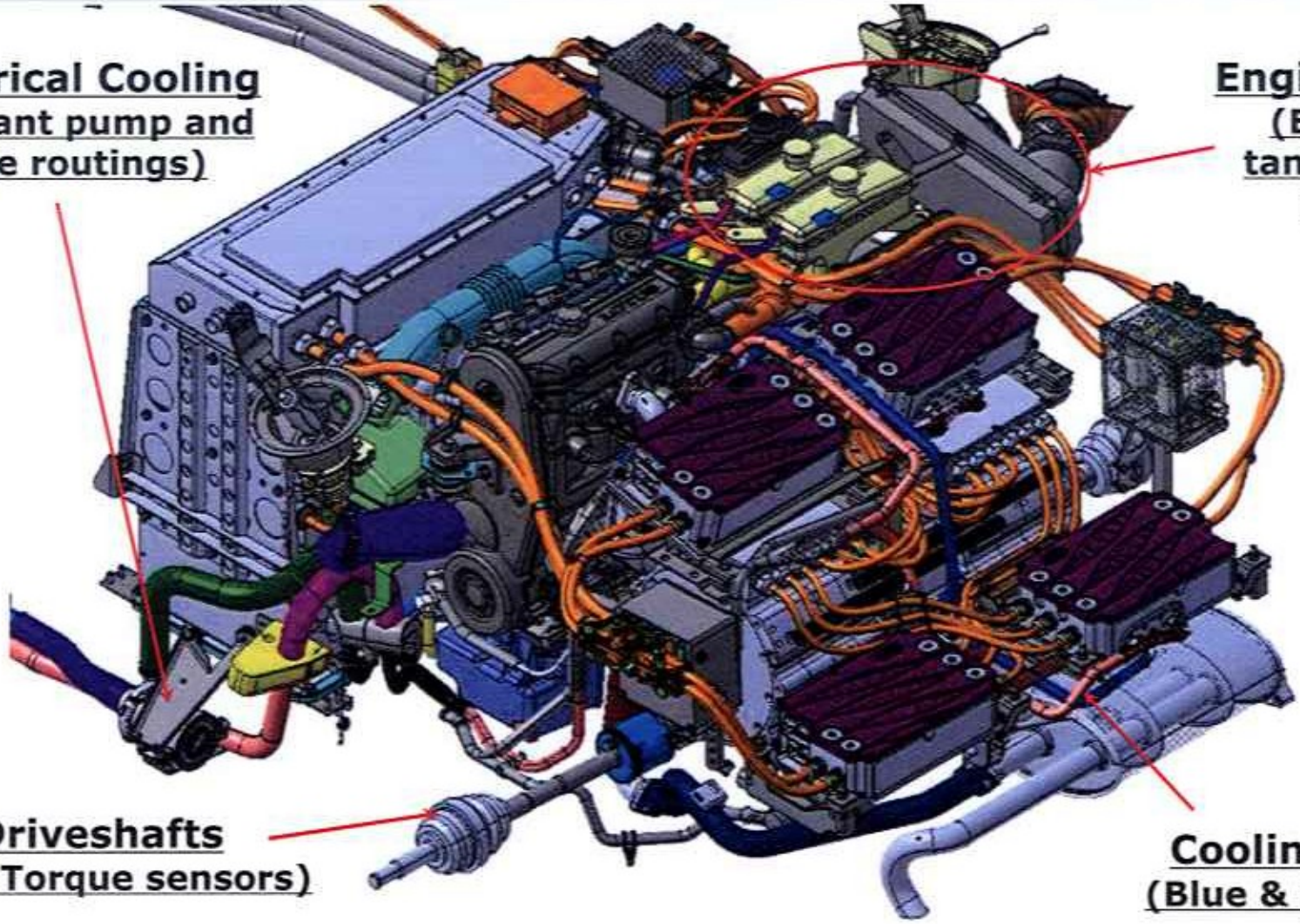

images © Group Lotus PLC

EMERG-E Dimensions

Vehicle Length: 4464mm
Vehicle Width: 1954mm
Front Overhang: 1020mm
Approach Angle: 8deg

Overall Height: 1219mm
Wheelbase: 2624mm
Rear Overhang: 820mm
Departure Angle: 19deg

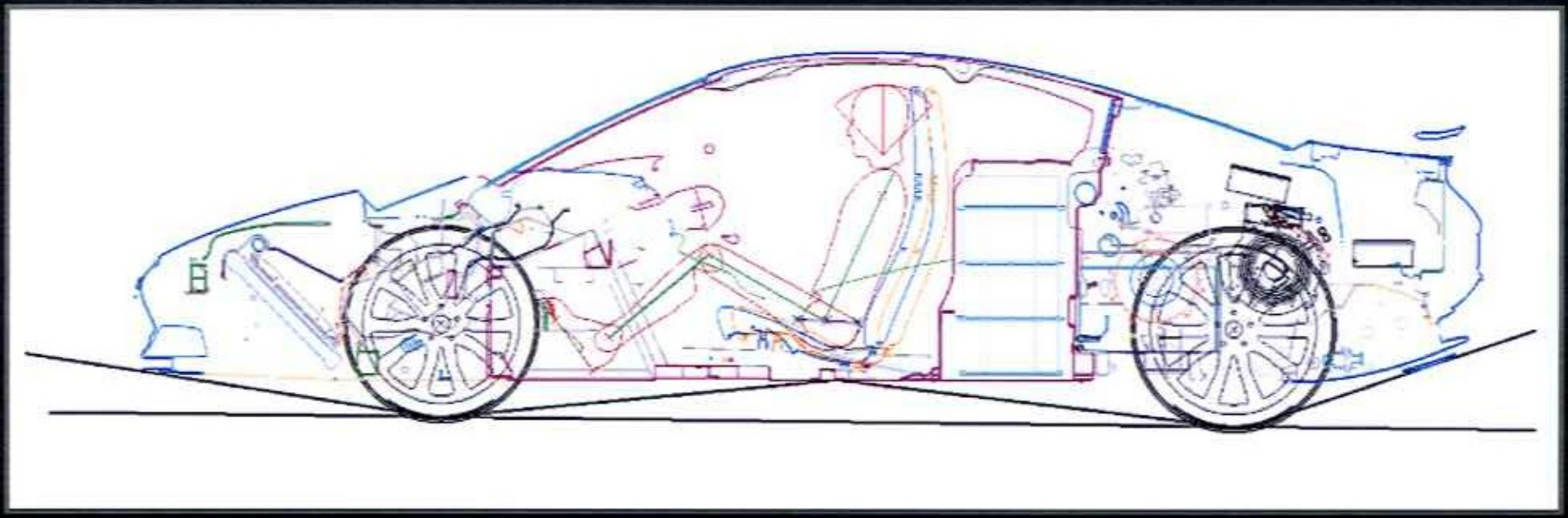

Body Structure

Carbon Fibre construction is used for Mass Reduction

Panel Thicknesses : 1.5mm to 5mm
Density : 1.39kg/m3
50% mass reduction and 20% strength improvement

Aerodynamics

Dynamic Handling for front and rear Lift

Aerodynamics		REEV Target CFD
Front Lift Coefficient	C_{LF}	-0.063
Rear Lift Coefficient	C_{LR}	-0.009

Rear spoiler development.

INFINITI

INFINITI Emerg-e

Technology Strategy Board

Driving Innovation

■ Where we are now!...

INFINITI Emerg-e show car launched at Geneva motorshow 6th March 2012.

INFINITI Emerg-e first public demonstration at Goodwood Festival of Speed 1st July .

Michael Fallon Minister for BIS Passenger in INFINITI Emerg-e at LCV CENEX event 5th September

INFINITI Emerg-e demonstrator appearing throughout Europe from October 2012.

Nissan Connect 2
Navigating to success

Inspiration (for Nissan Connect)

PND's have low cost, high customer value and high sales

PND cost and base feature

New Suppliers

2007 Development starts

I want full feature navigation at an affordable price

Add Nissan Value

OEM Navigation is high cost, dated features and low fitment

USP's and Feature

Navigation for all of **Europe**

Hands free **telephone**

USB connection For **iPod** or memory device

Customisable Personal points of interest

Traffic information

Intuitive, Integrated and easy to use interface

High value features that all customers appreciate.

Around view monitor

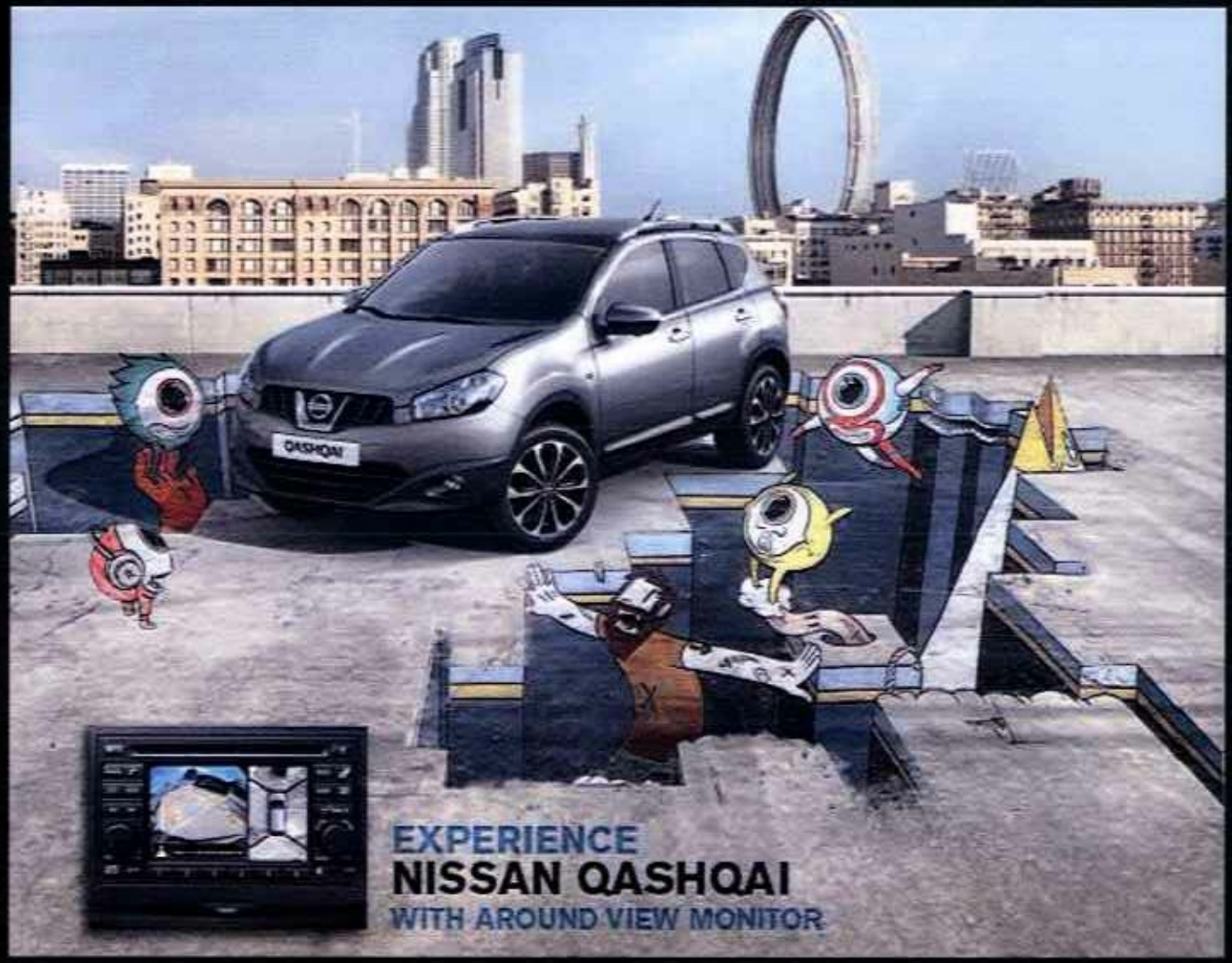

Nissan Connect 1
Connect 2 – Extending Global Reach

More than 1.2 Million units sold so far

Introducing Nissan Connect 2

Higher Customer Value, More Features

Clear and Easy to use 5.8" or 7" Screen

Safety:
Lane Guide/Exit information
Overspeed and Curve Warning

Google Search via Bluetooth + Send Google POI's from home.

Enhanced Connectivity:
Weather, Fuel Prices, Flight Information

Launched on Altima in US/Canada in Spring 2012

Success

NISSAN

Innovation and excitement for everyone

Affordable and packed with features customers want

Passion, drive and collaboration between all stakeholders

Autotrader.co.uk
Nissan Connect: 10/10

Unprecedented customer demand

Designed in Europe for Europe, tuned to meet global customers needs

Close collaboration with supplier

Understanding of customer needs and desires

Rapid development

Future

Nissan Connect has revolutionised IT system development for Nissan globally, delivering real customer needs and remained fresh with new feature and function during product life.

Nissan Connect. Born in Europe, now available worldwide

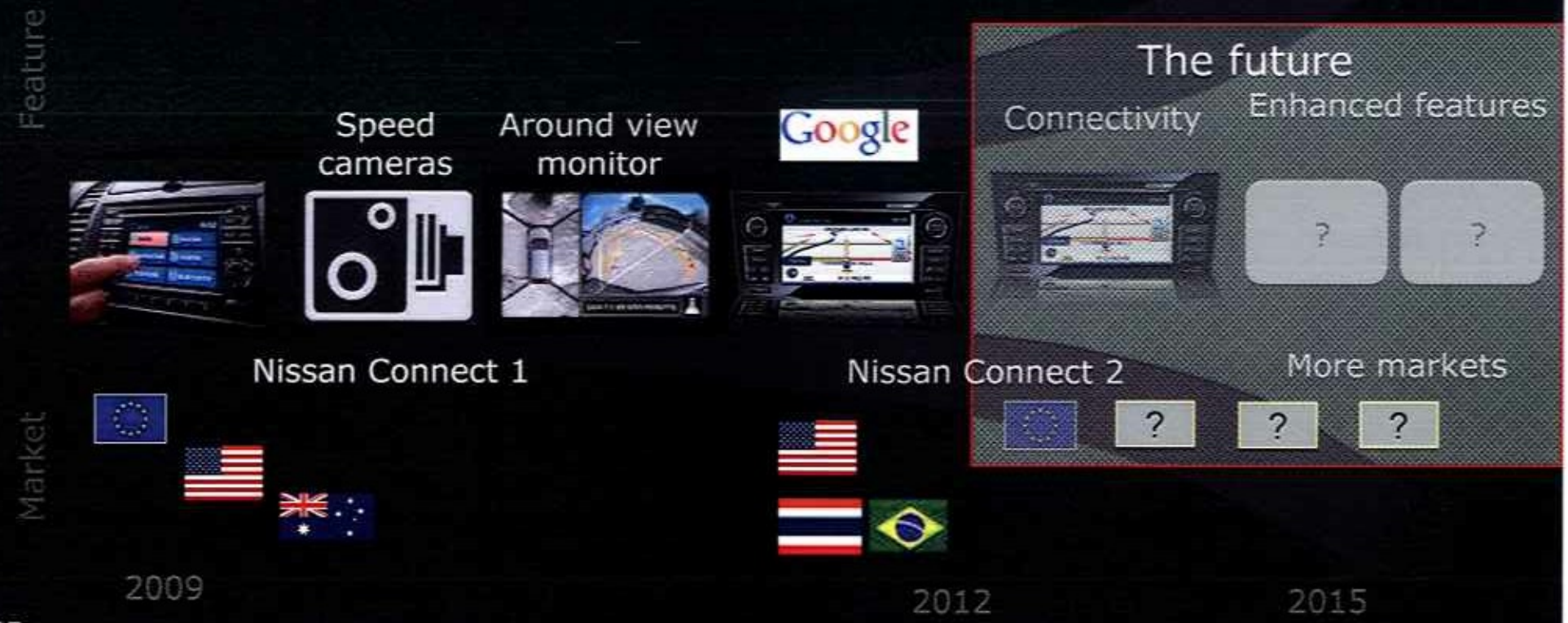

Building a stronger future

Customer is at the centre of what we do → Nissan aim – to deliver innovative products and technologies that create value for our customers. → What more can we do to achieve this? → Closer collaboration with the key players defining tomorrows technology

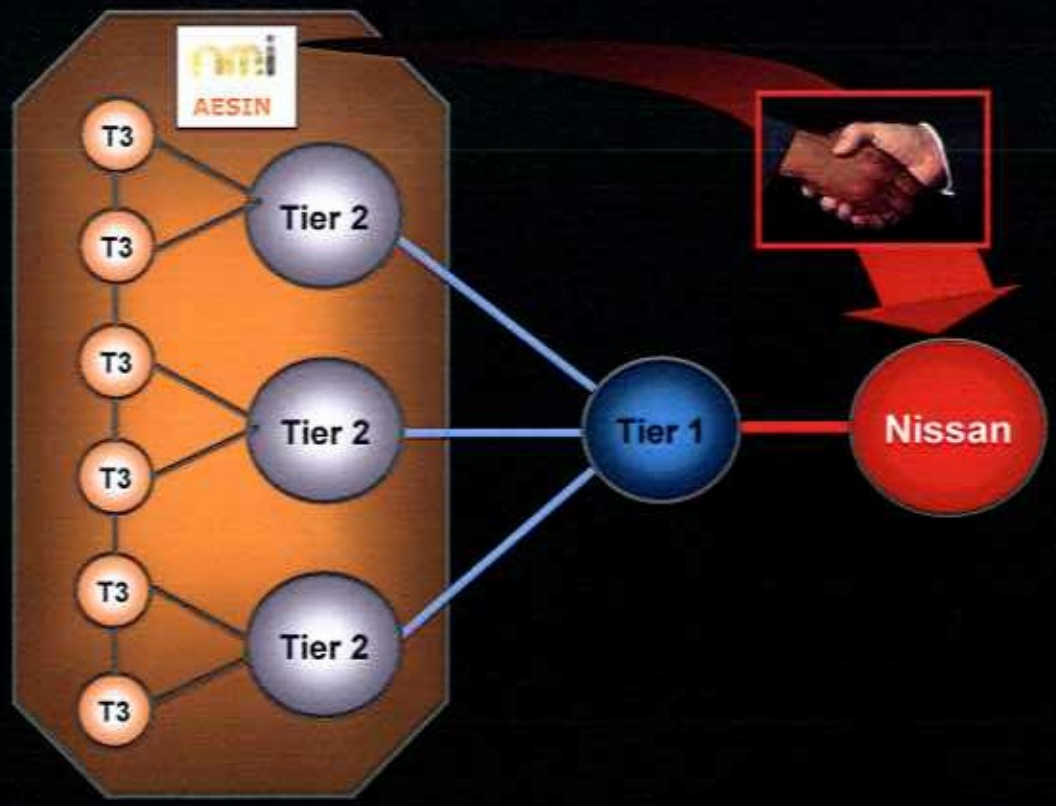

Stronger collaboration for a stronger product.

THANK YOU