The Heart of the Matter

Driver ECG monitoring using in-seat EPIC sensors

Robert Breakspear
Principal Applications Engineer

the heart of **technology...**

Why monitor driver health?

- Prevention of accidents caused by:
  - Driver Fatigue
  - Serious health issues
    - Cardiac arrest
    - Stroke
    - Blackouts

- Identification of stress
  - Interface with other in-car technology to reduce stress levels

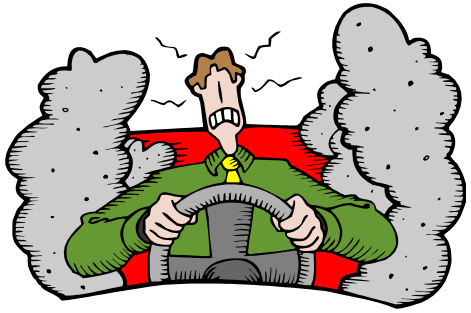

Driver Fatigue

- "Research shows that driver fatigue may be a contributory factor in up to 20% of road accidents, and up to one quarter of fatal and serious accidents"

  Source: RoSPA – Road Safety Information, June 2011

- "Fatigue related impairment has been estimated to be a contributing factor in 30% to 40% of heavy truck collisions"

  Source: AAA Foundation for Traffic Safety, 1985; National Transportation Safety Board, 1990

Existing methods of fatigue monitoring

- Timer (length of journey)
- Lane departure warning
- Head movement detection
- Blinking / eye-closure rate

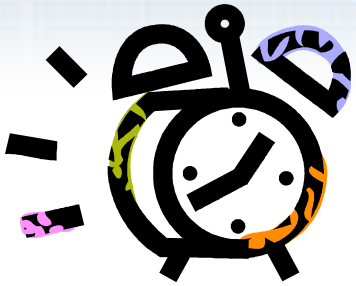

Other potential sources of data

- Is this enough?
  - Benefit of earlier warnings
  - Accidents due to fatigue-related concentration lapses
  - Microsleeps may be too late

- Other indicators:
  - Respiration rate
  - Body temperature
  - EEG – Alpha waves vs Beta waves
  - ECG

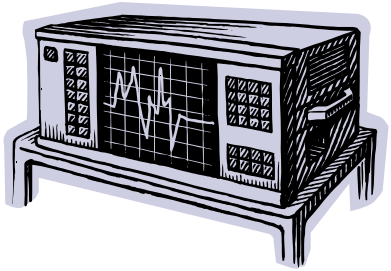

- The more data, the better the chance of accident prevention

ECG

- ElectroCardioGram (ECG) – Electrical activity of the heart muscle
- Heart rate
  - Studies show that Heart Rate Variability correlates with tiredness
- Heart health
- Measurement doesn't have to mean contact electrodes

The EPIC sensor

- **Electric Potential Integrated Circuit Sensor**

- Capacitively coupled electrometer, capable of measuring electrophysiological signals
  - ECG
  - EOG
  - EMG
  - EEG
  - Respiration rate

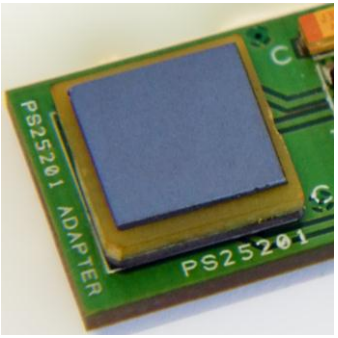

EPIC Sensor Characteristics

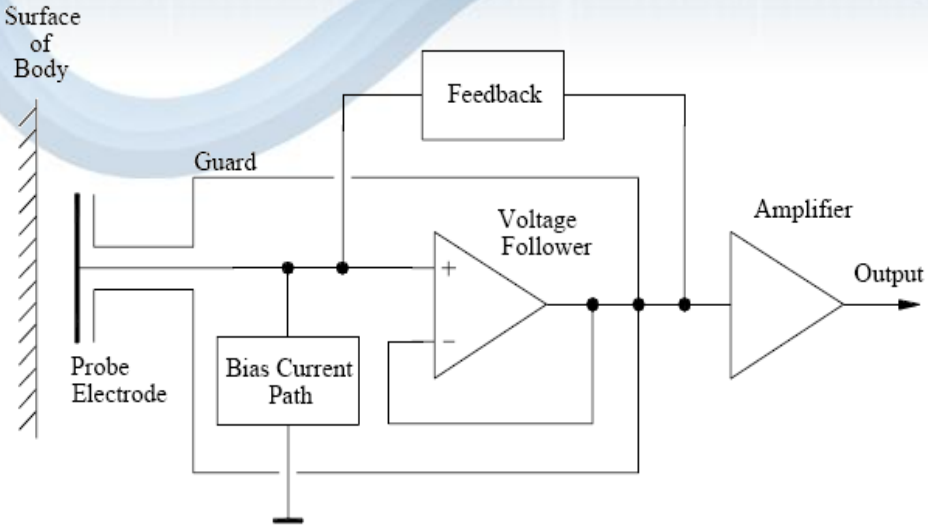

- Measures spatial electric potential or electric field
- Non-contact capacitive coupling
- Ultra high input impedance amplifier
- Virtually zero energy taken from field
- Bandwidth ~100mHz to > ~20KHz (adjustable)

Non-contact ECG sensing using EPIC

- Capacitive EPIC sensors can measure ECG without skin contact
- Capacitively coupled driven ground for noise reduction
  - Feeds back common mode signal to body in anti-phase

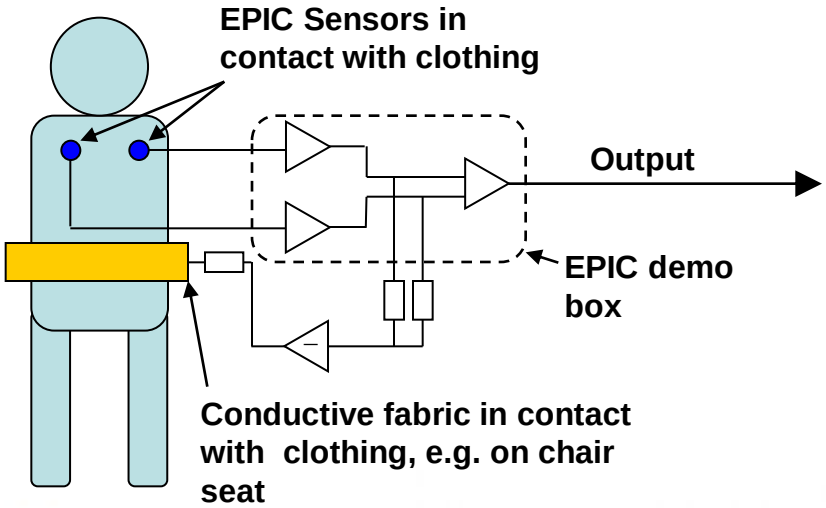

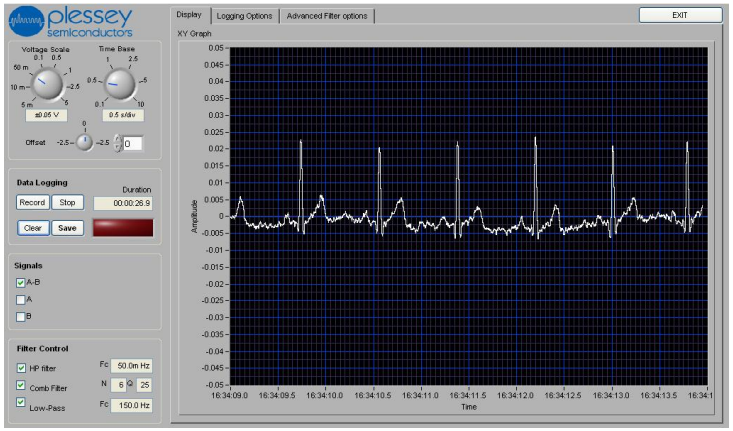

Hidden system

- Sensors and ground plane operate through a variety of materials including leather and cotton
  - Operates through seat covering and clothes
- Movement artefacts reduced by good sensor positioning
- Further noise reduction by coupling driven ground to steering wheel

Demonstration system

- Key features
  - 6 sensors in seat pad, select best position for each driver
  - 3 different electrode sizes
  - Adjustable gain in active ground feedback loop
  - Leather or cotton covering
  - USB interface to PC
  - Live data display or data recording for offline processing

Demonstration

- Demonstrated in moving vehicle

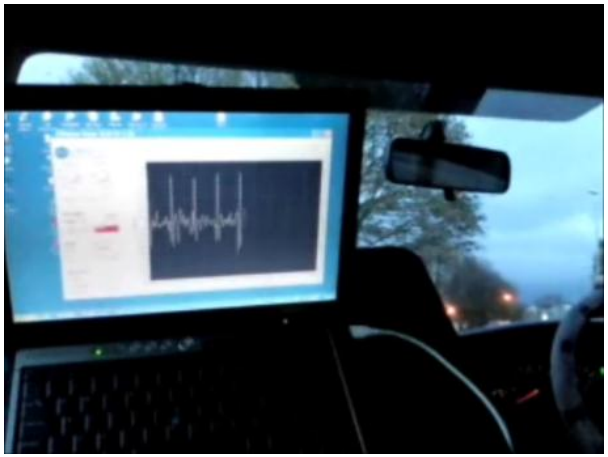

- Good signal quality with minimal signal processing
  - >95% of “R” peaks detected over 10 minute trial

Current status

- Systems being evaluated by several automotive manufacturers and Tier 1 suppliers worldwide
  - Manufacturers in US, UK and Europe building their own evaluation car seats using EPIC
- Demonstration kits available
- Plessey keen to work with further Tier 1, Tier 2 and automotive suppliers to develop systems

the heart of **technology...**