Vehicle Electrical Systems Integration

Aim: Reduce cost, size and improve reliability of the electrical power systems by integration of functionality in automotive applications.

EPSRC

Pioneering research and skills

Project Overview

- 4 year project started in October 2011
- 10 university partners
- £3.5m
- Initial focus on underpinning technologies
- Last 2 years focus on demonstrator projects

University Partners

Southampton University

Industrial Supporters

vesi
Vehicle Electrical Systems Integration

TECHOPS SEVCON

Scottish and Southern Energy

infineon

International IOR Rectifier

PRECISION SCORPIONS PERFORMANCE

LAND ROVER

TATA

TT electronics SEMELAB

conekt powered by TRW

Allied Vehicles Driving For Perfection

ABB

ARNOLD MAGNETIC TECHNOLOGIES

HIFLUX HIFLUX

DYNEX

The Team – January 2012

Project Rationale

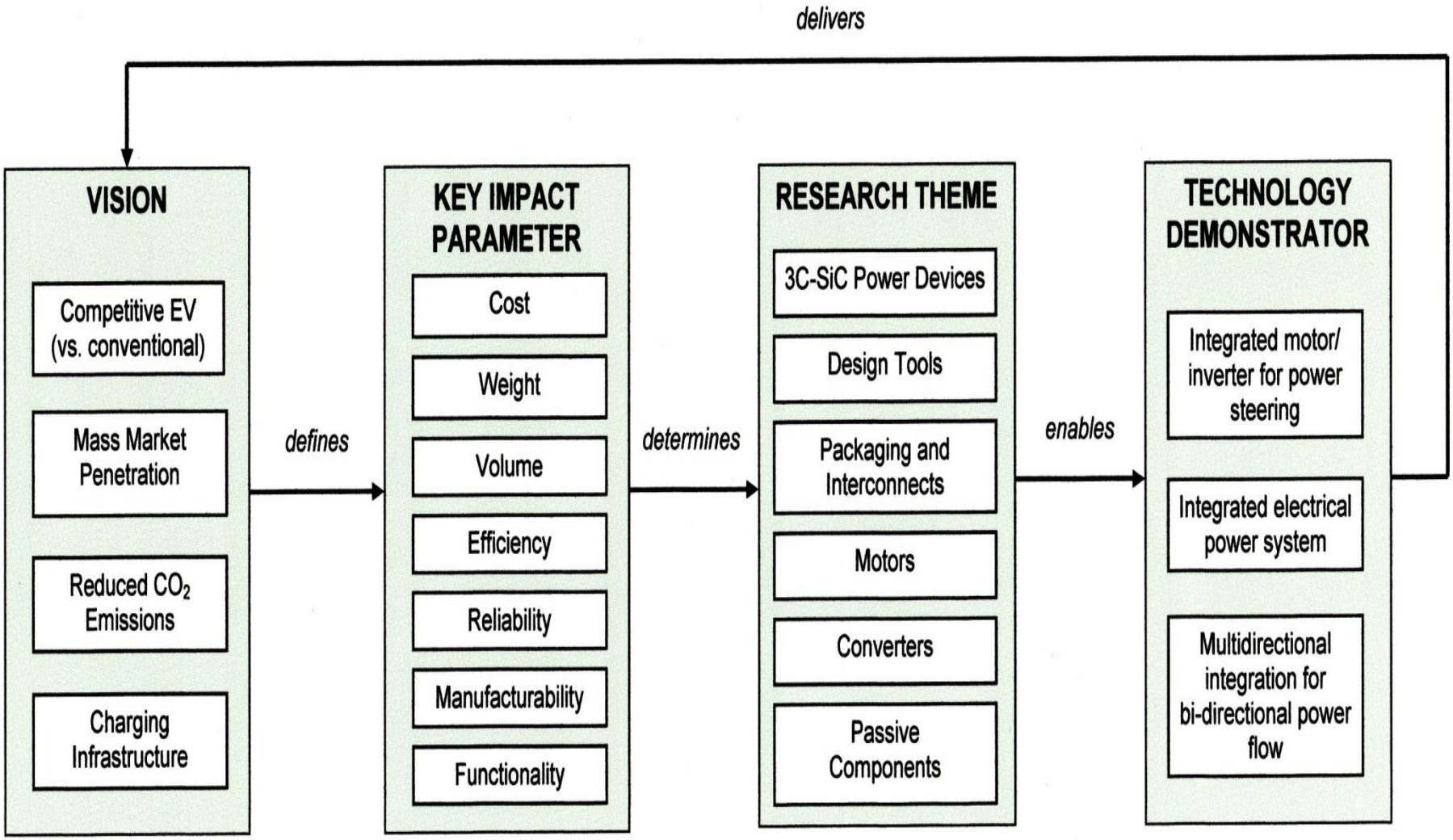

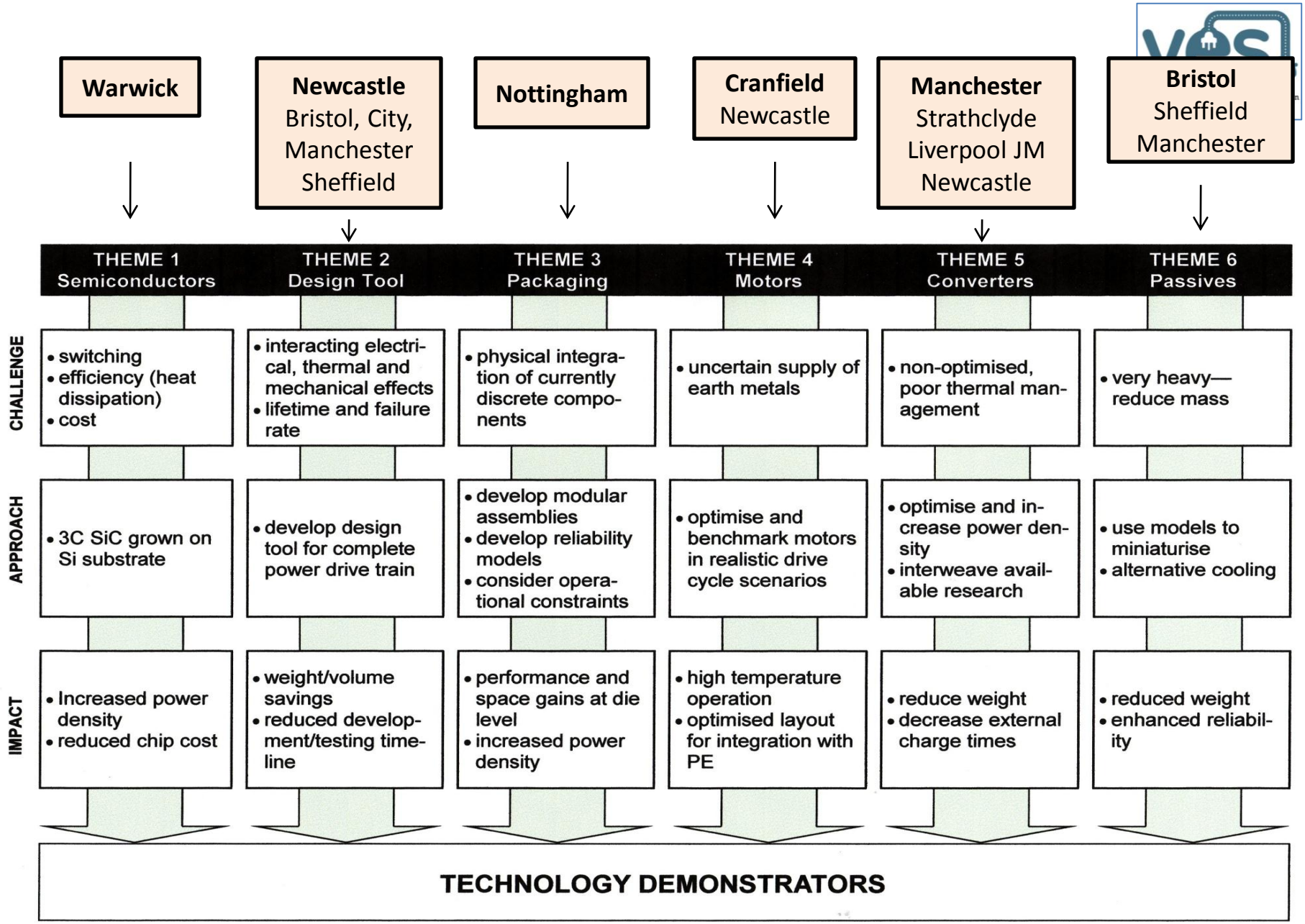
Warwick
Newcastle
Bristol, City, Manchester Sheffield
Nottingham
Cranfield
Newcastle
Manchester
Strathclyde Liverpool JM Newcastle
Bristol
Sheffield Manchester
THEME 1 Semiconductors
THEME 2 Design Tool
THEME 3 Packaging
THEME 4 Motors
THEME 5 Converters
THEME 6 Passives
CHALLENGE
• switching • efficiency (heat dissipation) • cost
• interacting electrical, thermal and mechanical effects • lifetime and failure rate
• physical integration of currently discrete components
• uncertain supply of earth metals
• non-optimised, poor thermal management
• very heavy—reduce mass
APPROACH
• 3C SiC grown on Si substrate
• develop design tool for complete power drive train
• develop modular assemblies • develop reliability models • consider operational constraints
• optimise and benchmark motors in realistic drive cycle scenarios
• optimise and increase power density • interweave available research
• use models to miniaturise • alternative cooling
IMPACT
• Increased power density • reduced chip cost
• weight/volume savings • reduced development/testing timeline
• performance and space gains at die level • increased power density
• high temperature operation • optimised layout for integration with PE
• reduce weight • decrease external charge times
• reduced weight • enhanced reliability
TECHNOLOGY DEMONSTRATORS

Series Hybrid Scheme

- ICE does not provide traction
- It is connected in series with the electrical machine

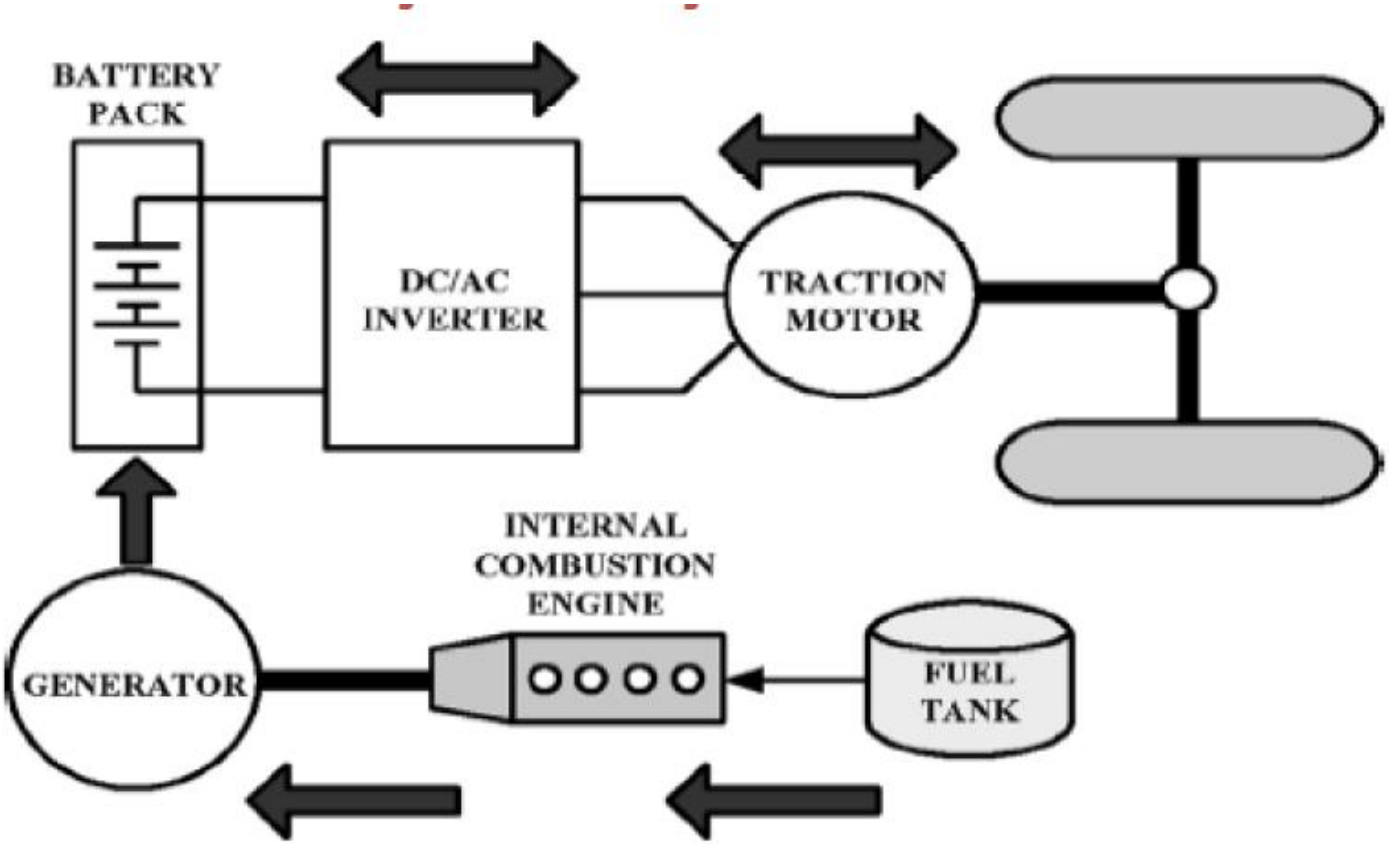

Parallel Hybrid Scheme

- ICE and electrical machine both provide traction
- They are connected in parallel

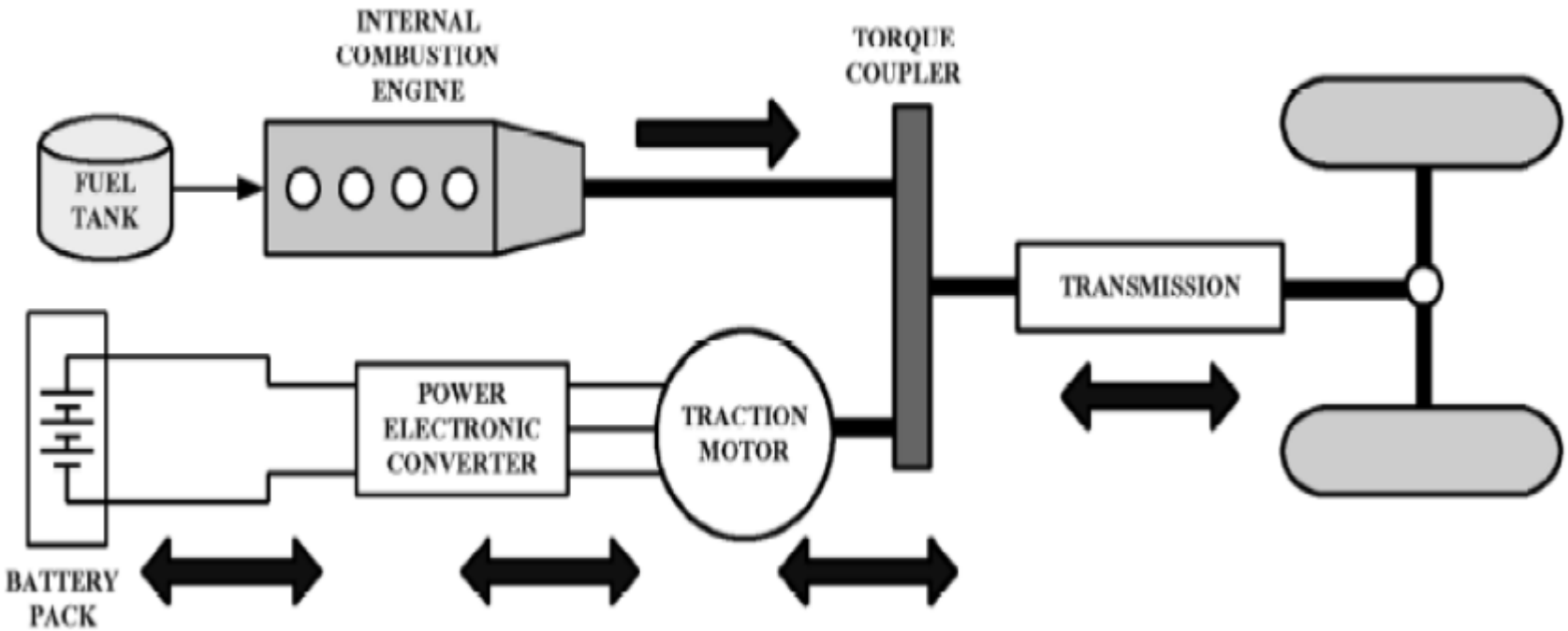

Series/Parallel Hybrid Scheme

- Combination of both

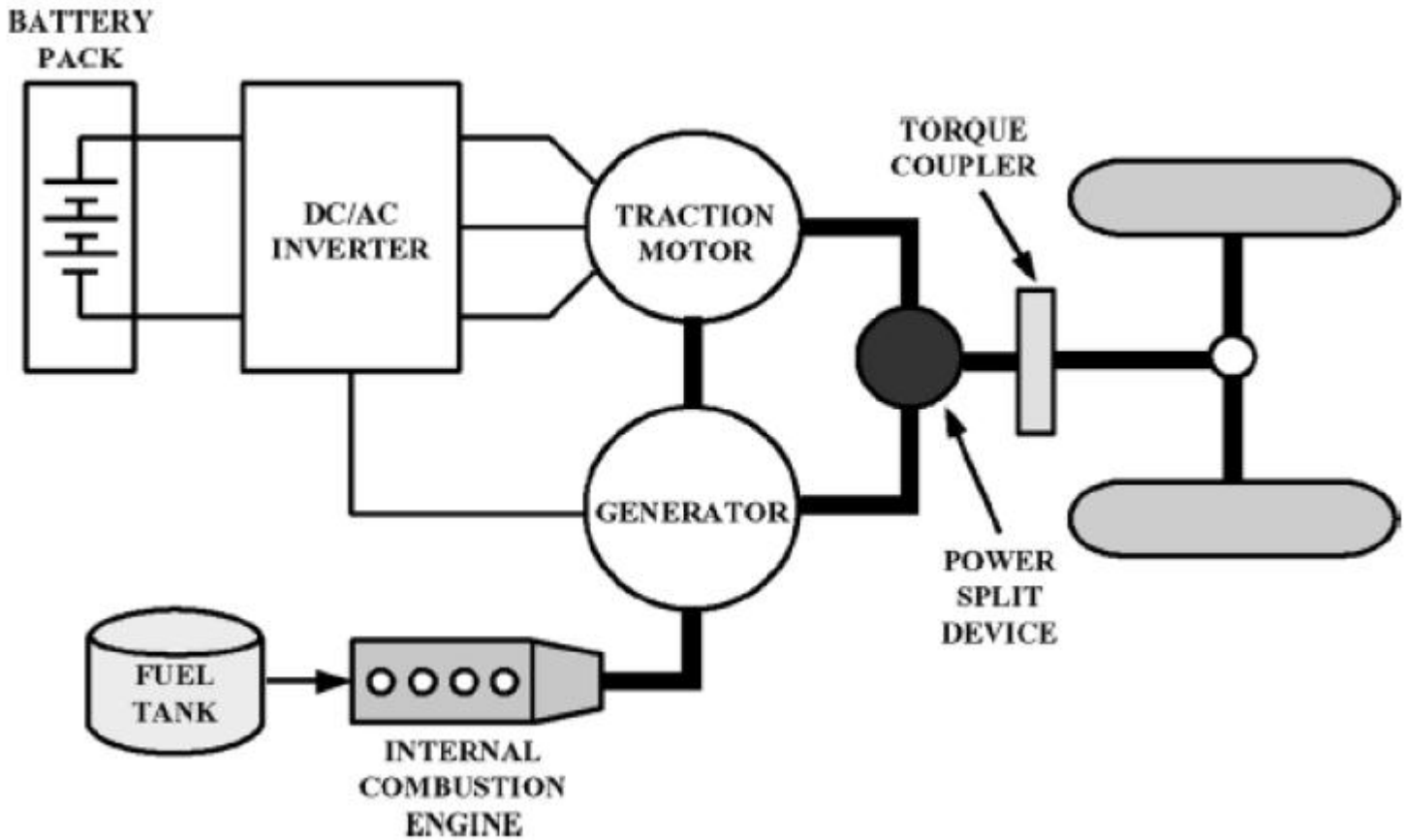

Full Electric

- No ICE
- Permanent magnet synchronous machines (80kW for Nissan Leaf)
- 480 V Lithium ion battery

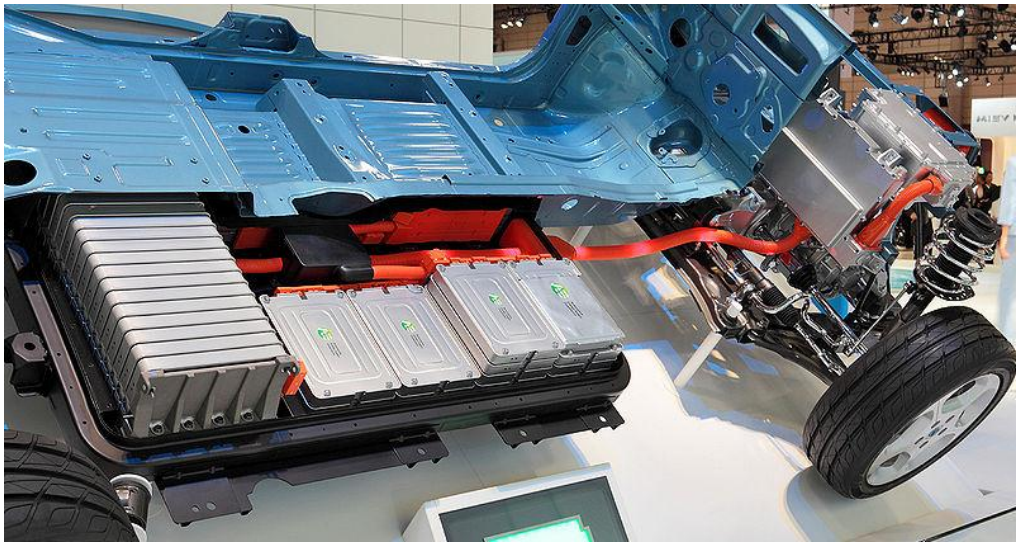

Theme 1: Device Technology

- SiC at present is not cost effective
- 4H – expensive starting material
- Is 3C-SiC grown on Silicon a solution?
- Should be cheaper but hard to grow high quality material because of lattice miss-match

Wide Bandgap Semiconductors

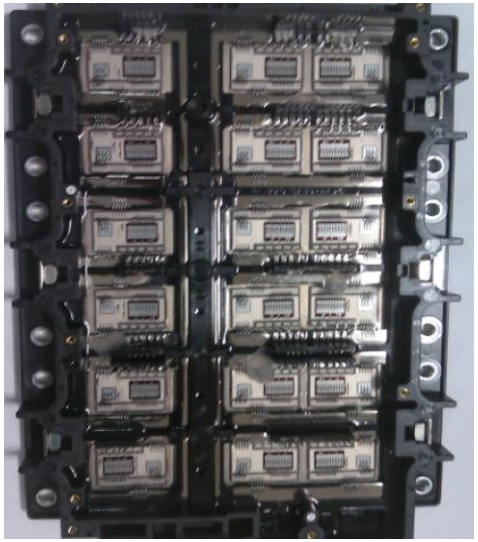

Electric Vehicle Powertrain

Inverters convert DC power from battery/fuel cell into AC power for electric motor

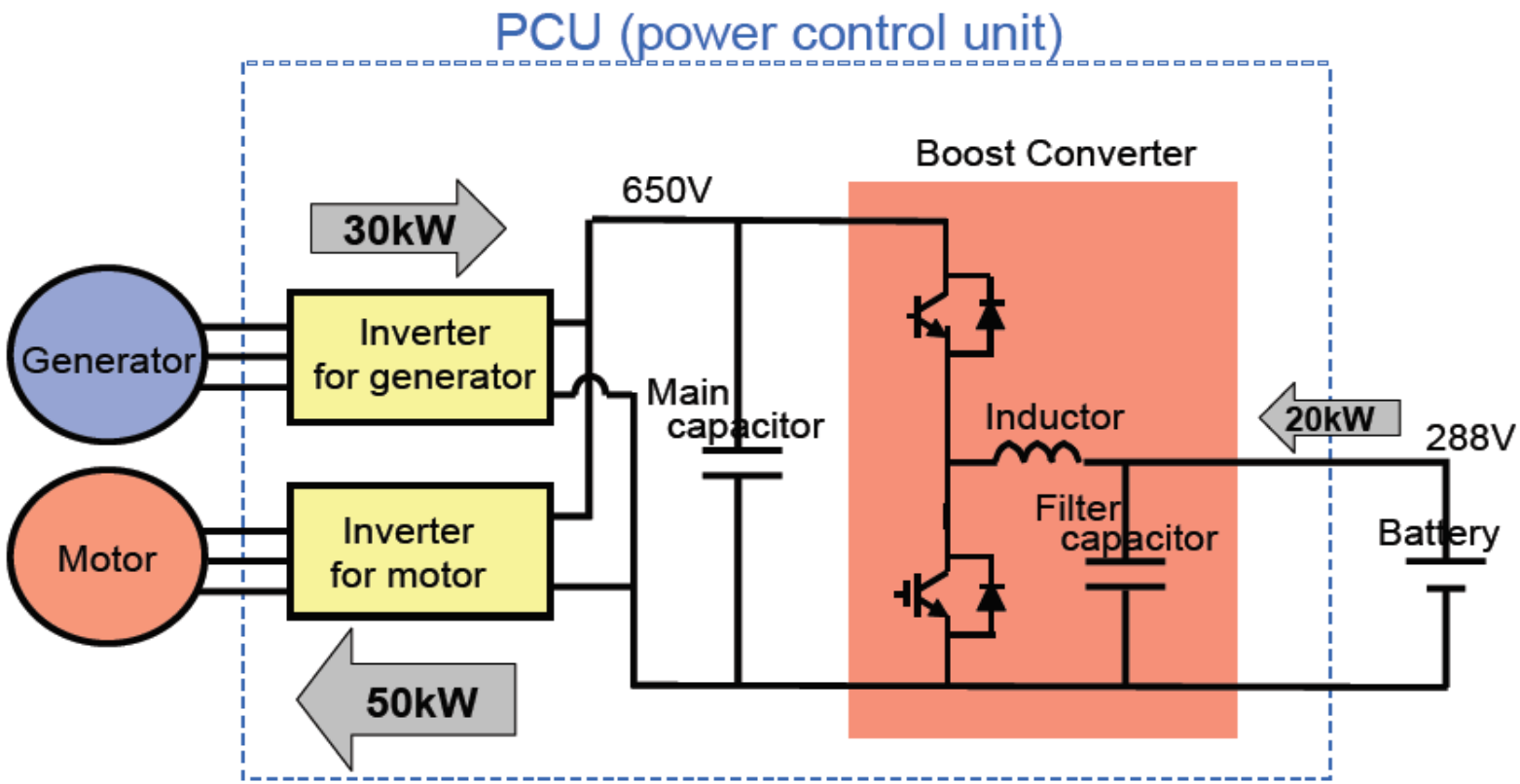

THS power train schematic from M Ishiko (Toyota R&D vol.39 No. 4)

Current Technology in HEV Inverters

Silicon Insulated Gate Bipolar Transistors

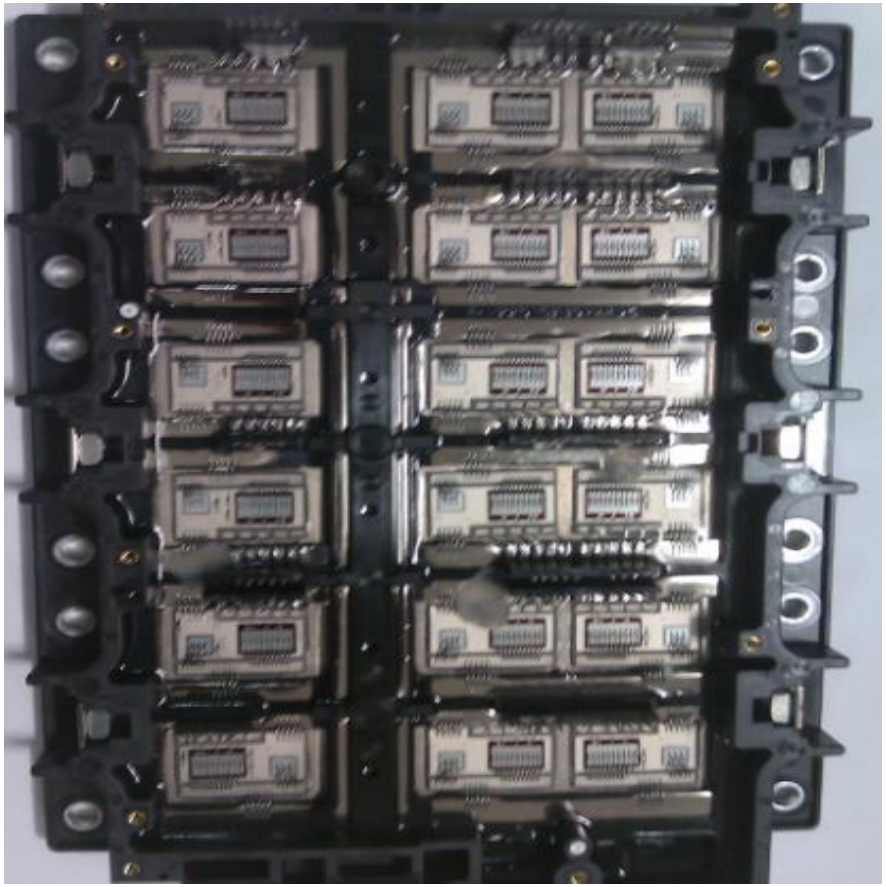

- Bus voltage of 500 V
- Breakdown Voltage of 850V
- On-state current of 200A
- Device Area of 133 mm^2
- Delivers power to a 50kW motor
- 30kW power capability when generating

A Kawahashi, ISPSD 2004

Inverter Module for THS II

Current Technology in EV Inverters

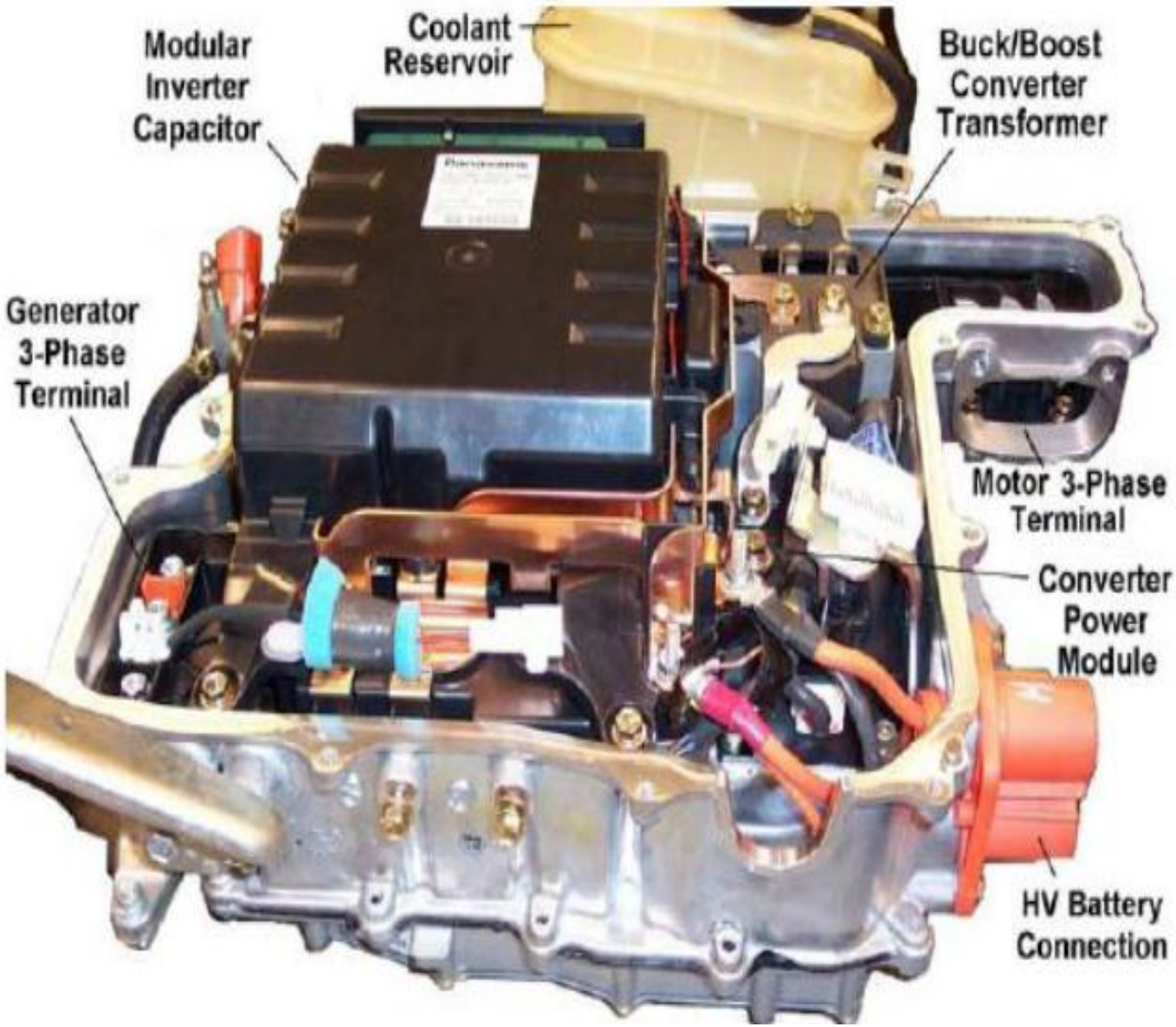

Current Technology in EV Inverters

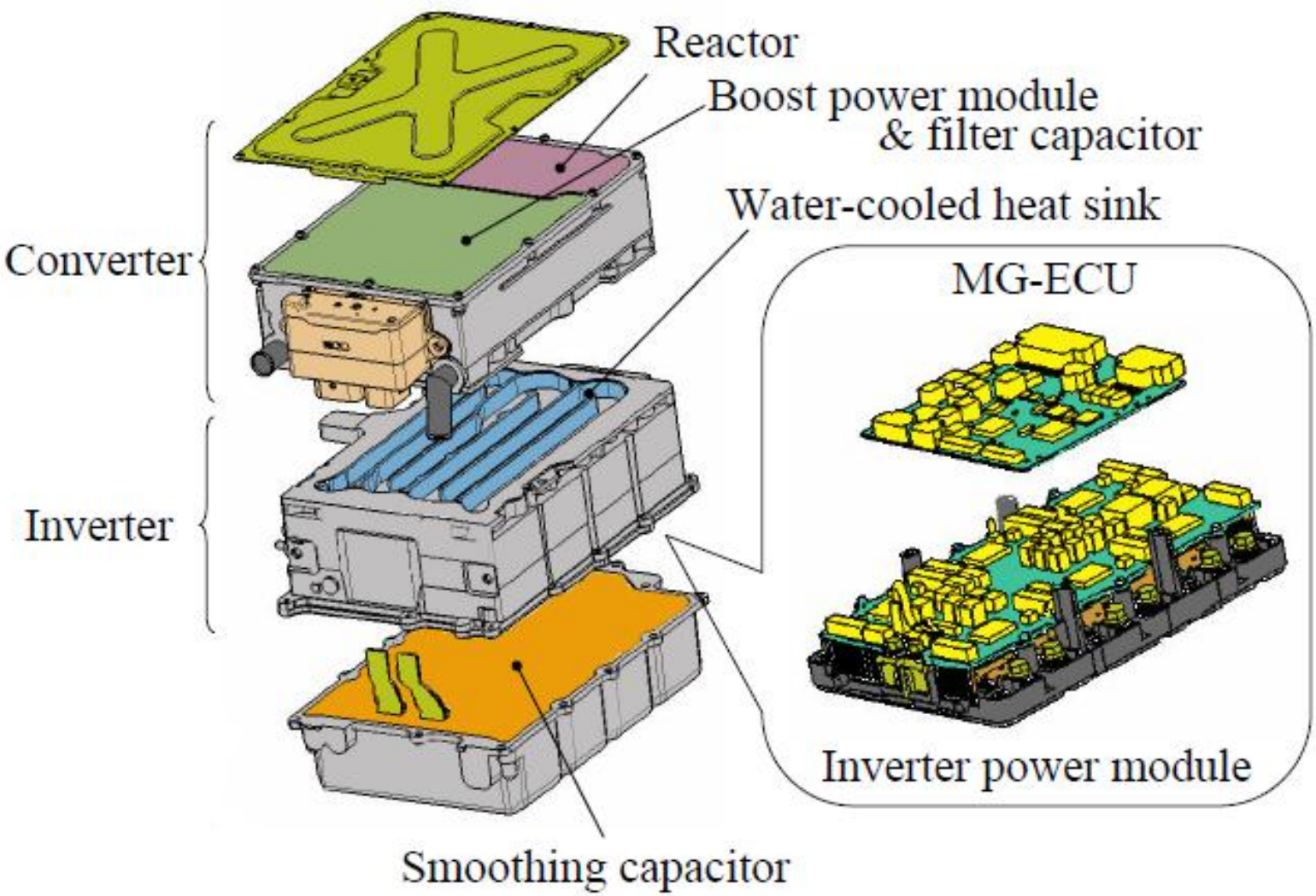

Toyota IGBTs

Item		1st Generation	2nd Generation	3rd Generation
Chip Appearance				
Device Structure	Gate	DMOS	DMOS	Trench
	Vertical	PT	PT	Thin Wafer
	Lifetime Control	He irradiation	He irradiation	None
Chip Thickness		380 µm	380 µm	165 µm
Breakdown Voltage		700	850	1250
Chip Size		1	0.75	0.62

Toyota IGBTs

Item	'03 Prius	'05 RX	'06 GS
Chip appearance			
Device structure	Planar IGBT	EFD IGBT	EFD IGBT
Chip size (mm^2)	13.7×9.7	12.75×9.39	12.75×9.39
Chip thickness (um)	380	375	**300**
Breakdown voltage (V)	970	**1200**	**1200**
On-state losses (W/cm^2)	265	**242**	**232**

Novel structure (EFD IGBT)

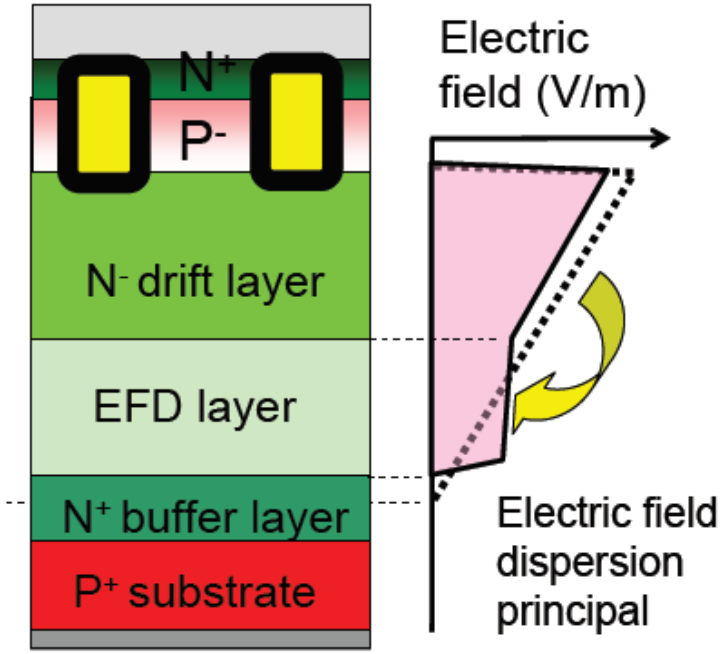

(High BV)

SiC Device Technology

Today

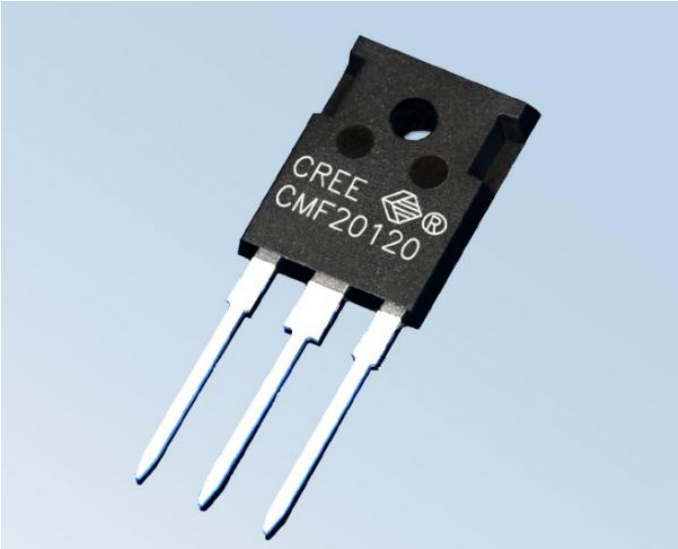

Single MOSFETs
1200V, 30A, 80mΩ

Full SiC Power Modules

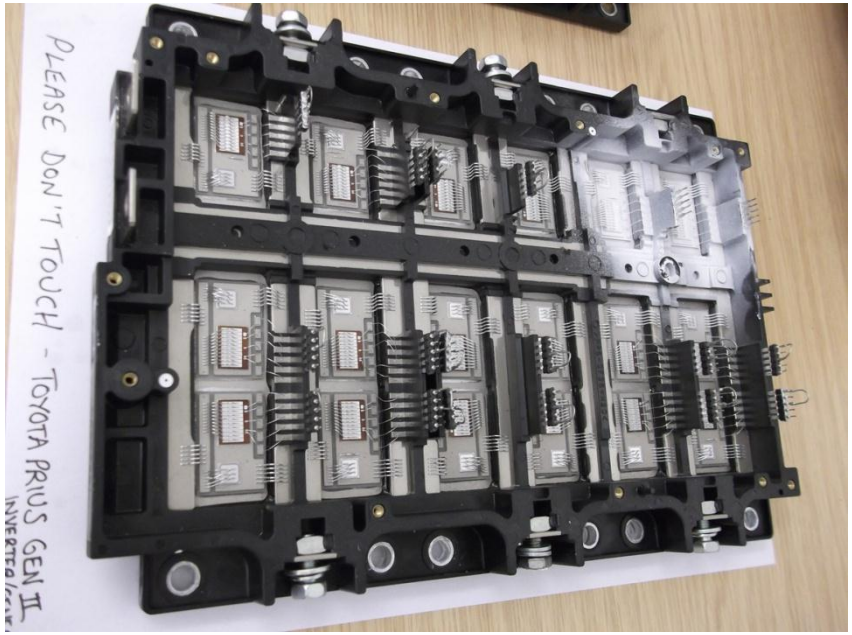

Toyota SiC JB Diodes !!!

Development of SiC Diode

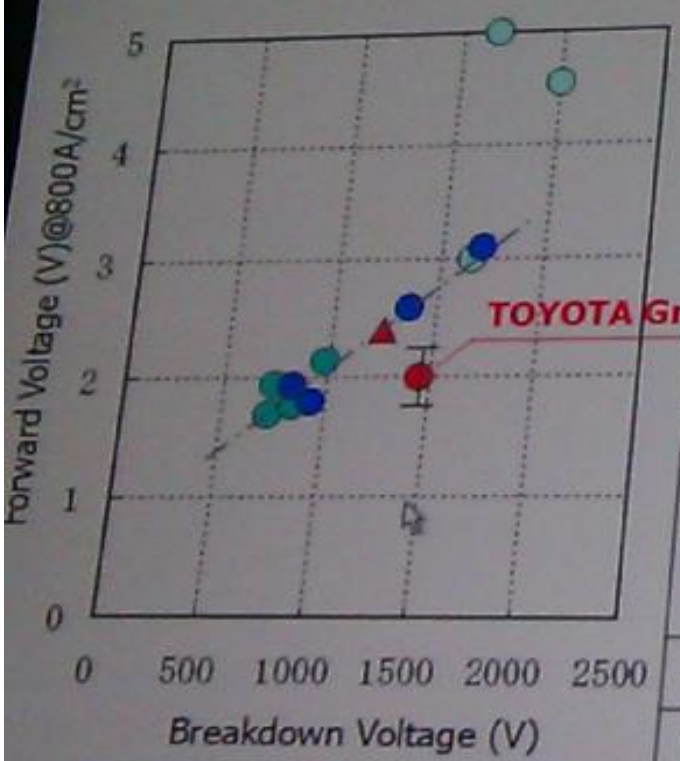

TOTOYA Group's Diode Structure (JBS-Mo)

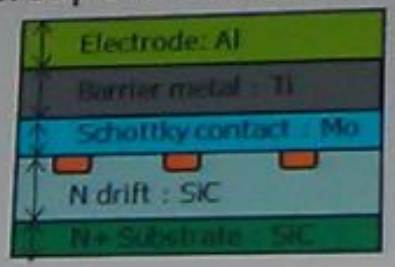

	A	B	C	TOYOTA Group
Overview		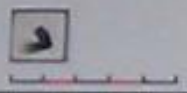		
Chip size	1.14×1.43 mm	1.75 mm□	2.13 mm□	6.0 mm□
Active area	1.18 mm²	2.31 mm²	3.76 mm²	25 mm²
Rated current	8 A (678 A/cm²)	10 A (433 A/cm²)	10 A (266A/cm²)	200 A (800A/cm²)
Rated voltage	600V		1200V	

Approach:

Theme 2: Design Tools

Step 1	Step 2	Step 3
Characterise missing electrical, thermal and mechanical links of today's simulators	•Prediction of convective heat transfer in electric machines •Physics-of-failure based models of new assembly techniques •Loss mechanism and heat removal in inductors for dc/dc converters	Development of new heat removal techniques •Heatpipes embedded in rotor •Cooling plate with locally changing thermal impedances •High thermal conductivity potting compounds

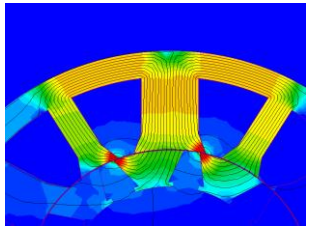

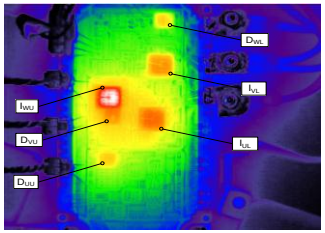

Theme 3: Packaging

Novel packaging techniques

High temperature operation

Low cost manufacturing

High reliability

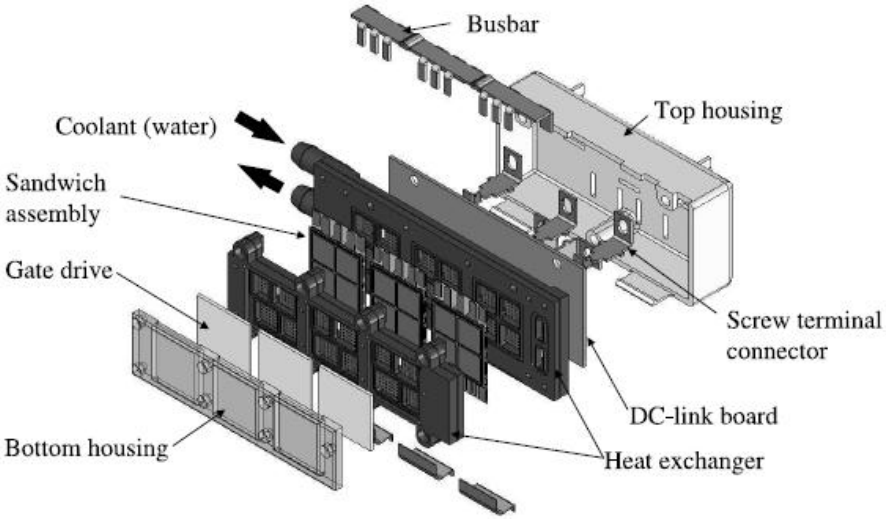

Theme 4: Motors

Design, construction and test of magnet-less PSM

possible two PSM with integrated planetary gear

Design, construction and test of magnet-free PSM

possible outer rotor geared high speed SRM

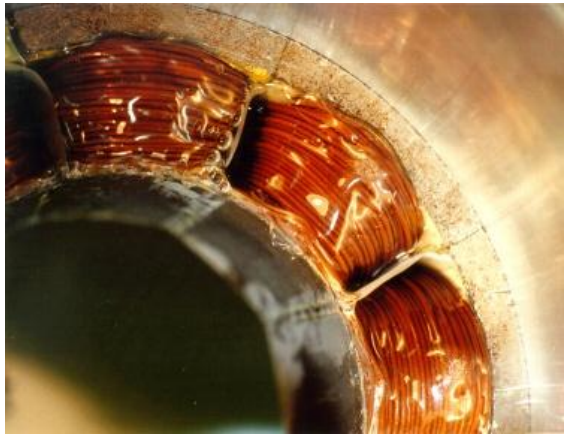

Theme 5: Converters

New converter topology concept

such as multi-level converters,

current source inverters

Optimised component selection

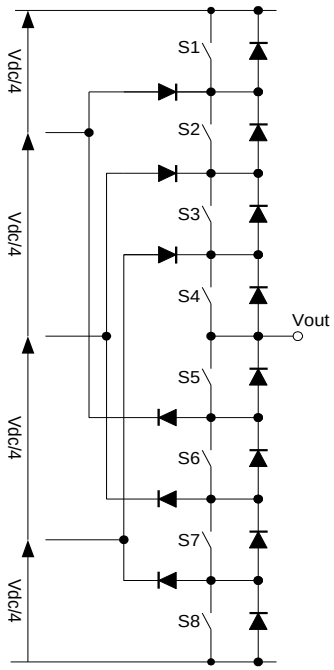

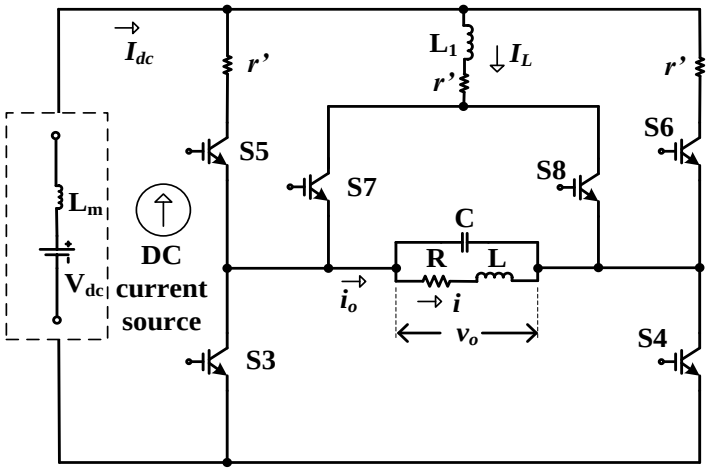

Theme 6: Passives

Reduction in the size of passive components due to:

intelligent control

new materials

new cooling methods

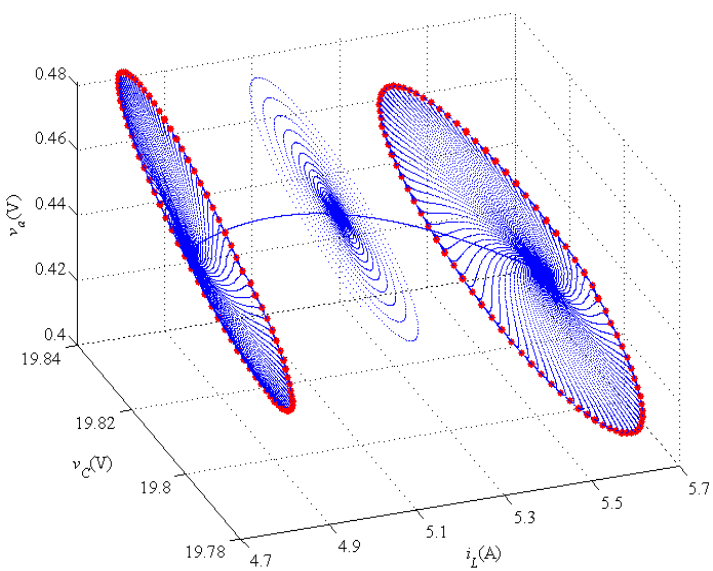

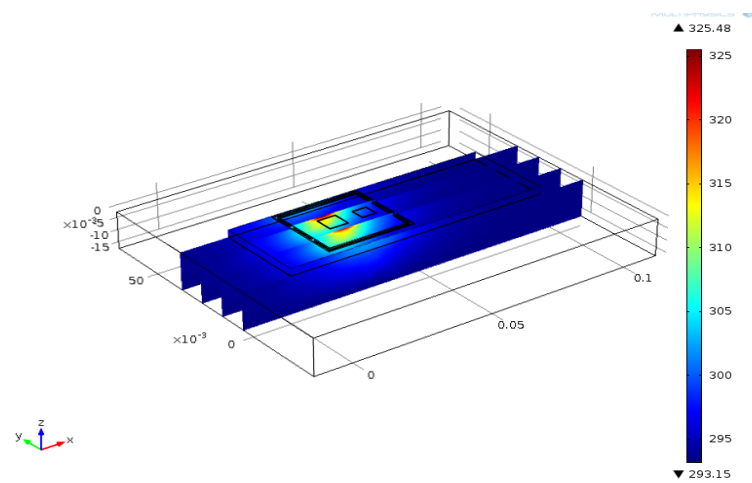

Thank you