NMI Technical Network

15 Years in Multi-Core Systems

Home **E**ntertainment & **D**isplays Group

Home **V**ideo **D**ivision

Andy LUNNESS

Formerly INMOS…

Types of Multi-core Systems

- Discrete – multiple cores on PCB
- Modules
- True integration/System on Chip (SOC)
- Multi-chip module (MCM)/System In Package (SIP)

- Many multi-core systems start out as discrete designs and evolve
- Driven by the relentless push to reduce cost and PCB area
- Driven by need for more MIPS
- Replacement of Hard-IP with programmable solutions

Real world example: Interactive PVR Set-top box

- High end digital STB box specification circa 2000
  - TCP/IP, disks, multiple tuners, bells, whistles, knobs…
- Computationally demanding
  - Solution: Dual CPU system
    - STi5514 – Intelligent peripheral controller and video decode
    - ST40GFX – Main application CPU and graphics manipulation

Architecture

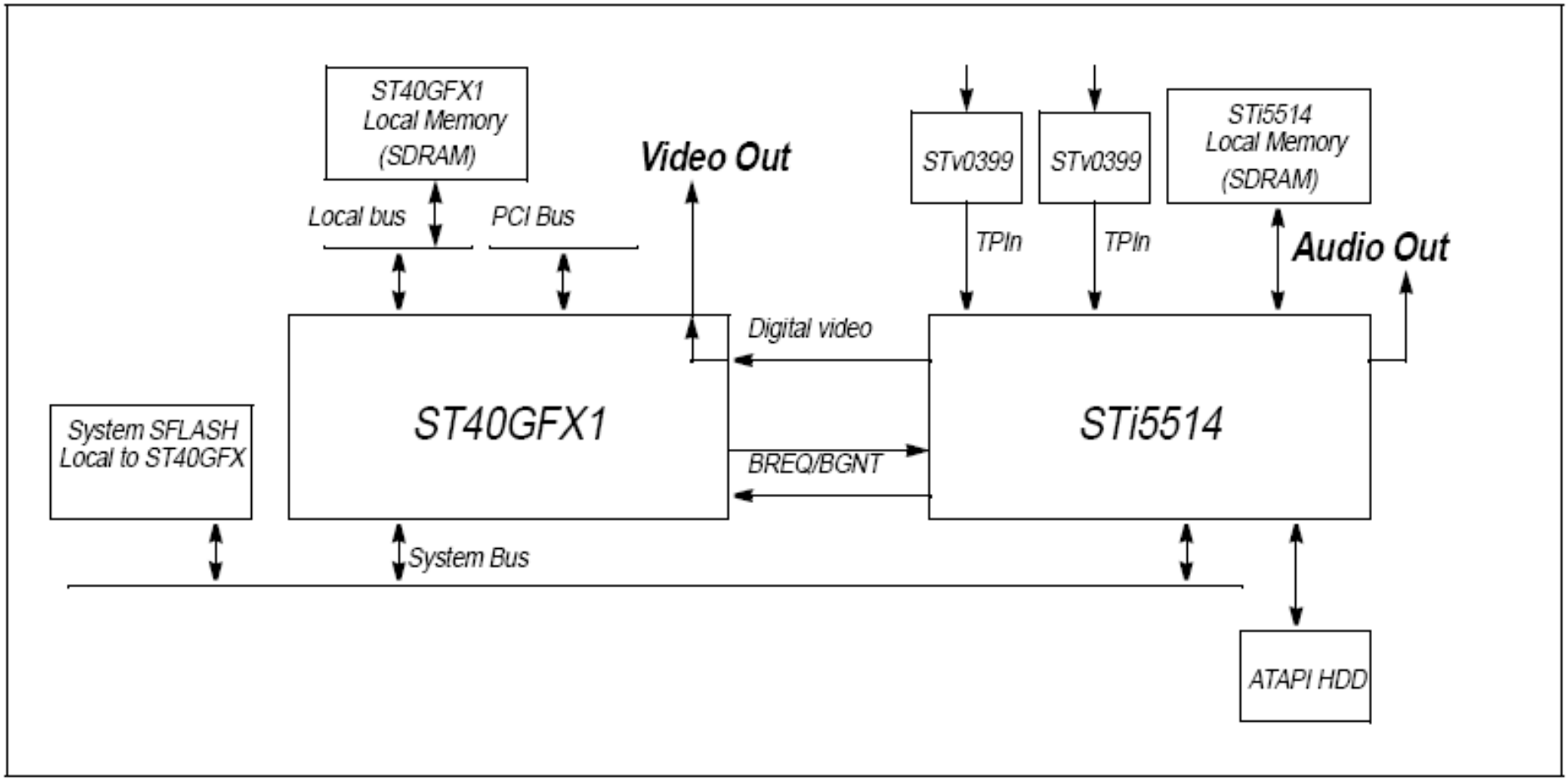

Discrete: Multiple cores on one PCB

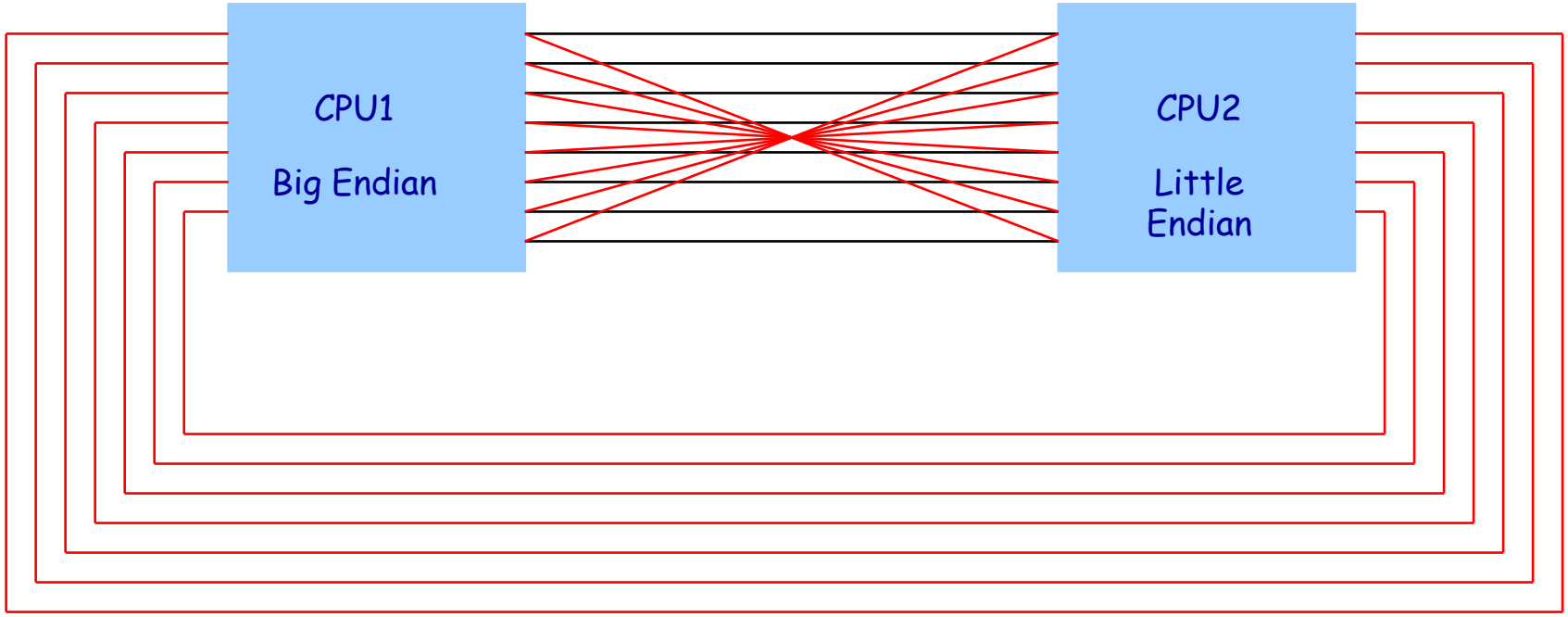

Modules

- Plug-in modules
  - Essentially discrete multicore systems
  - Tested, packaged to provide a standard interface
- Connectivity is often an issue
  - particularly with busses or high speed datapaths
- Prototyping ICs: Custom built emulator

DB568 - STI5528 emulator for use in debug and software development of the MB376

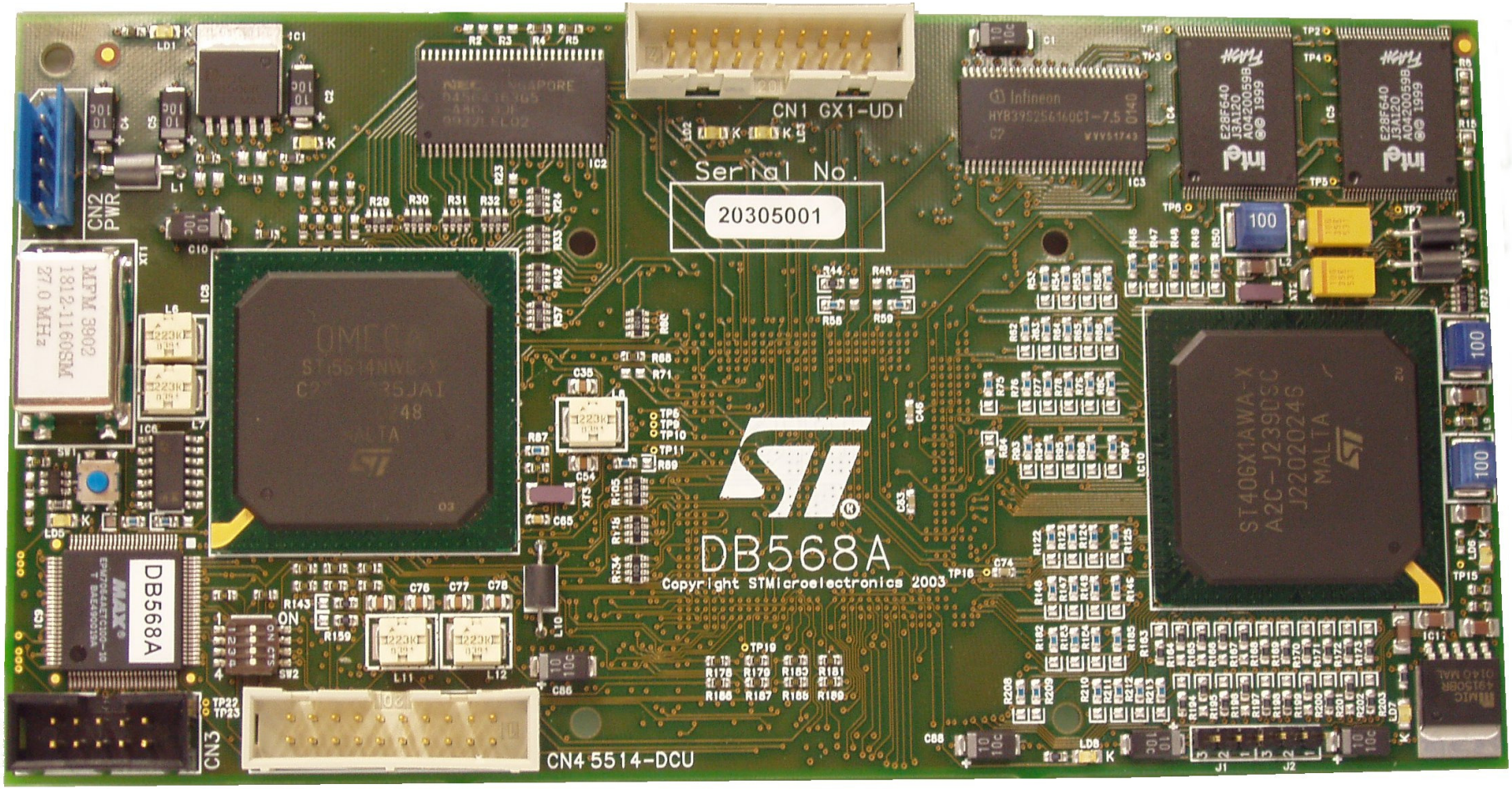

SOC Integration – STi5528

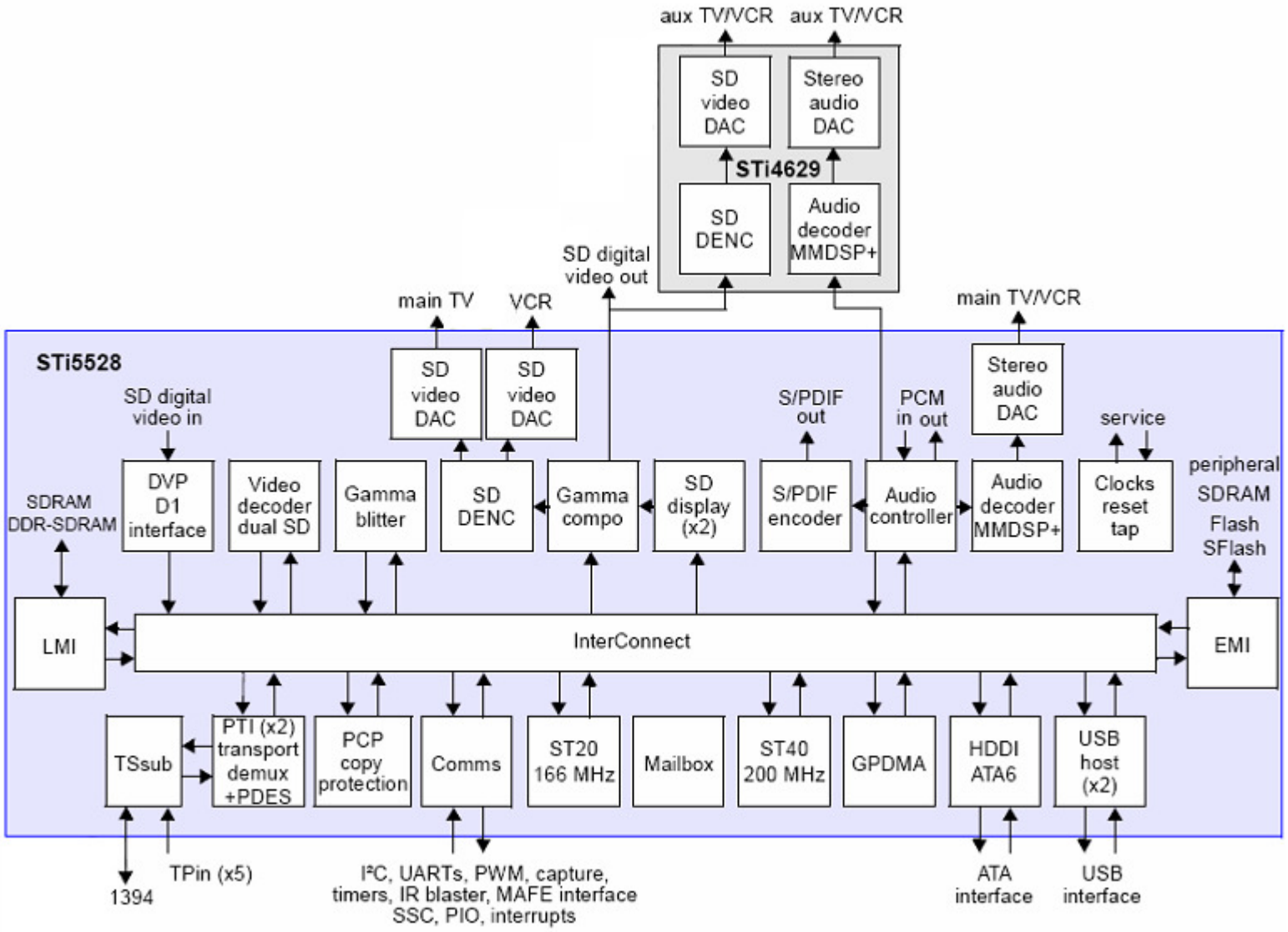

Splitting the Software Stack

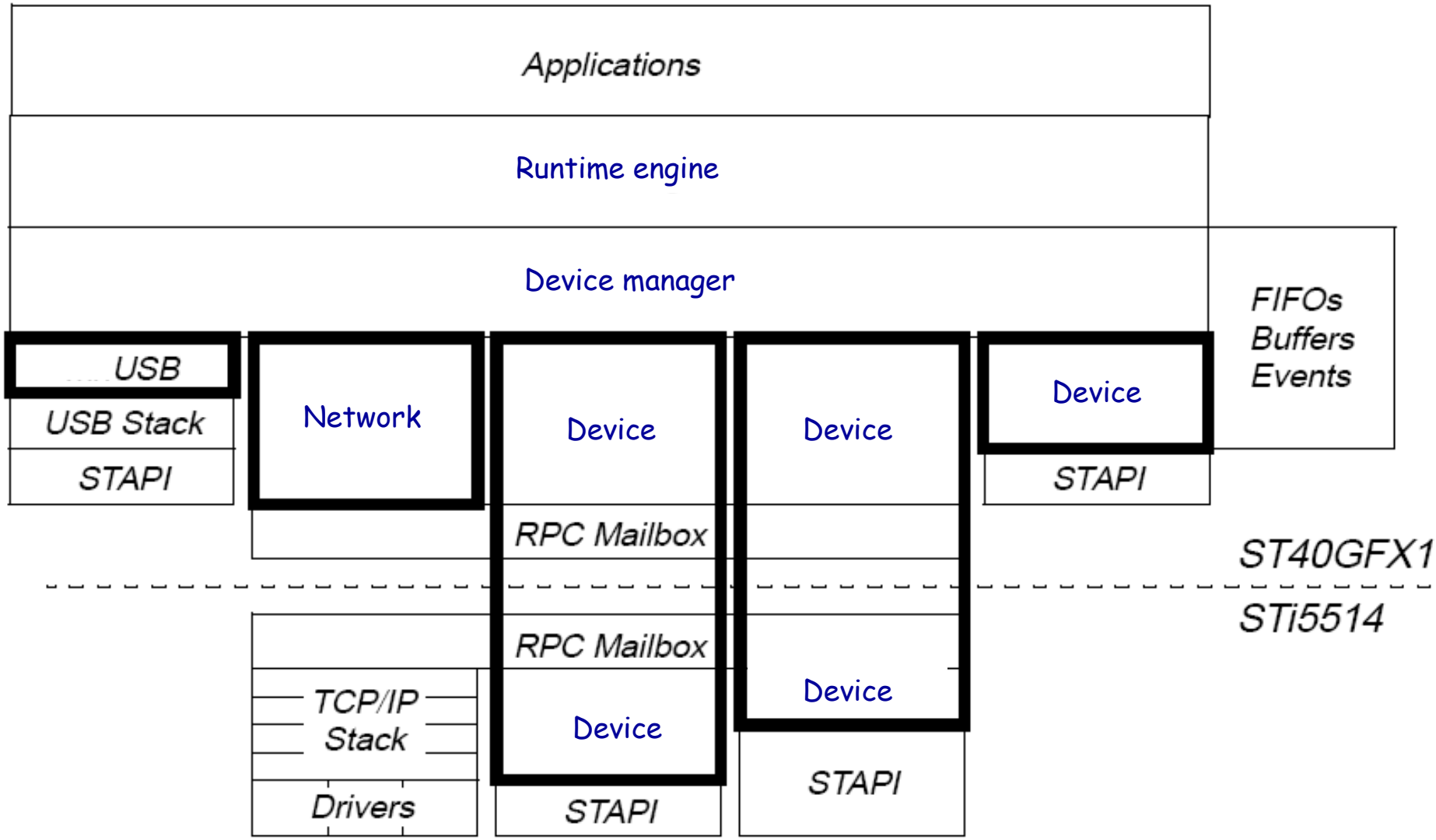

Software Stacks

- Where to split the software stack?
  - Granularity/frequency of RPCs
  - Amount of data transferred
  - Remember endianness – packing/unpacking of structures!

- Temptation to re-use what you already have
  - Migration of functionality may never happen

Multicore SW debug

- Two discrete JTAG connectors
- Two discrete compilers, debuggers
  - Different syntax, tools, capabilites
- Limited ability to trigger one from other

Multi-chip Modules/SIP

- Existing silicon die are packaged together

- Advantages
  - Proven, qualified silicon design re-used
  - Overall reduced ball-count due to internal connections
  - Ability to mix different technologies, eg 90nm and 65nm

Real world example – MCM

- 3 die in single package
  - 240 ball BGA substrate
  - First die, 65nm flip-chip
  - Second die, 90nm stacked and wire bond
  - Third die, 65nm stacked and wire bond
  - Add a pinch of passives
  - Bake in a really hot oven for a couple of hours

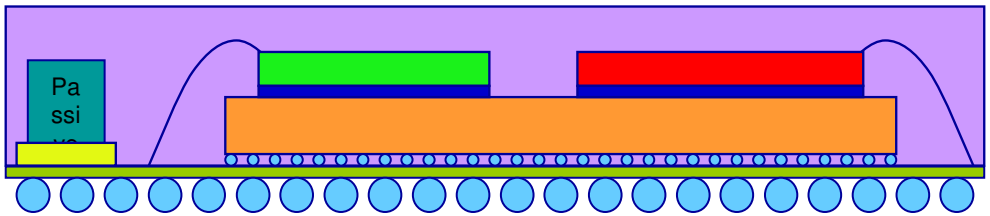

3 die and passives in a single package

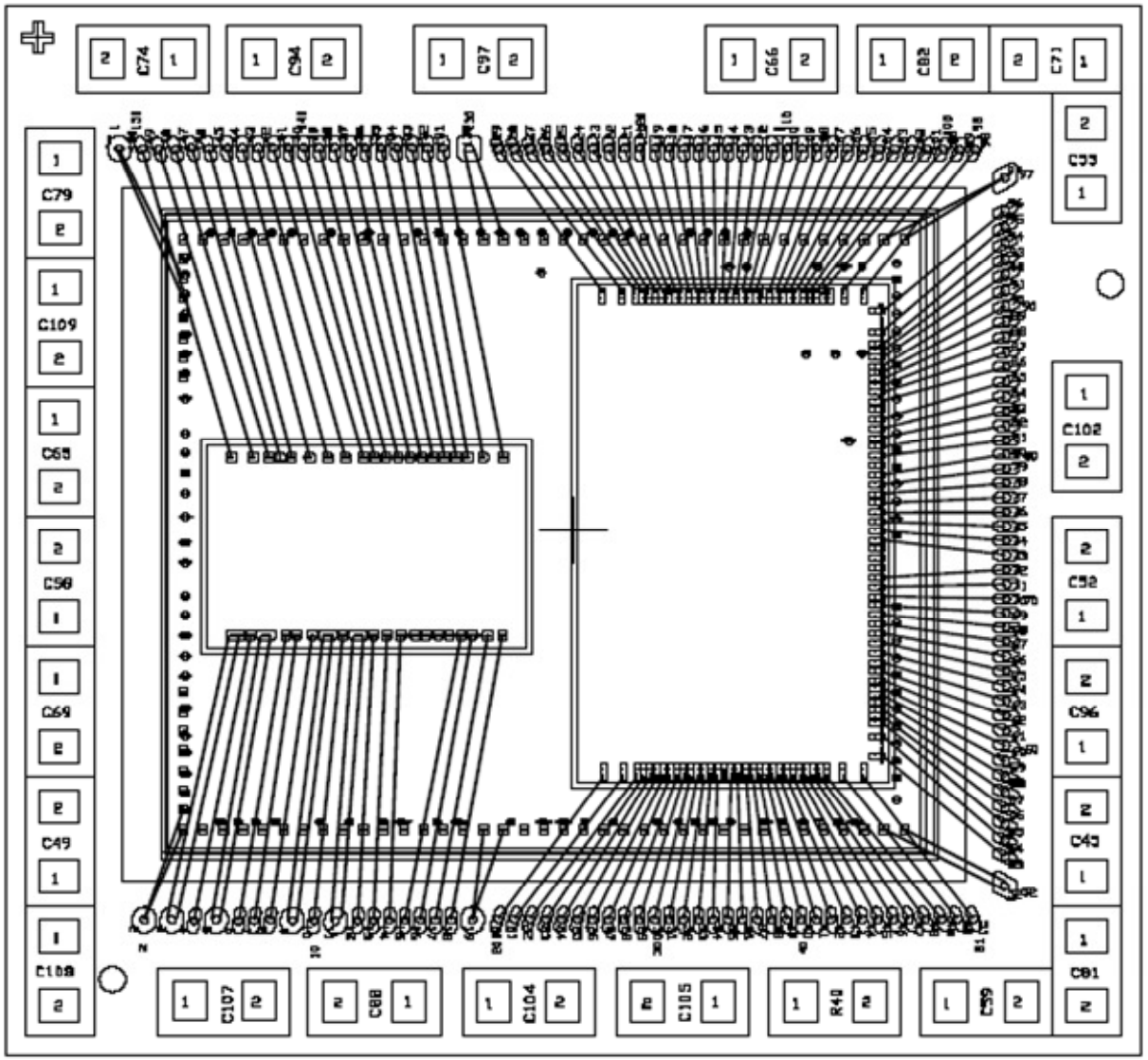

Multichip modules - drawbacks

- ... but beware
  - Relative die sizes may lead to enlarged footprint
  - Internal connections reduce ability to reuse final tests
  - Compound yield loss
  - Manufacturability

Replacing hard IP with programmable cores

- Silicon area tends to be larger
  - Replace dedicated IP with general purpose CPU
  - Need on-chip RAM workspace, dedicated ROM
- Firmware – so what is it?
  - Software
  - Hardware
- Upgradable solution for evolving standards
  - What about security, system integrity

STi7141 Distributed Processing

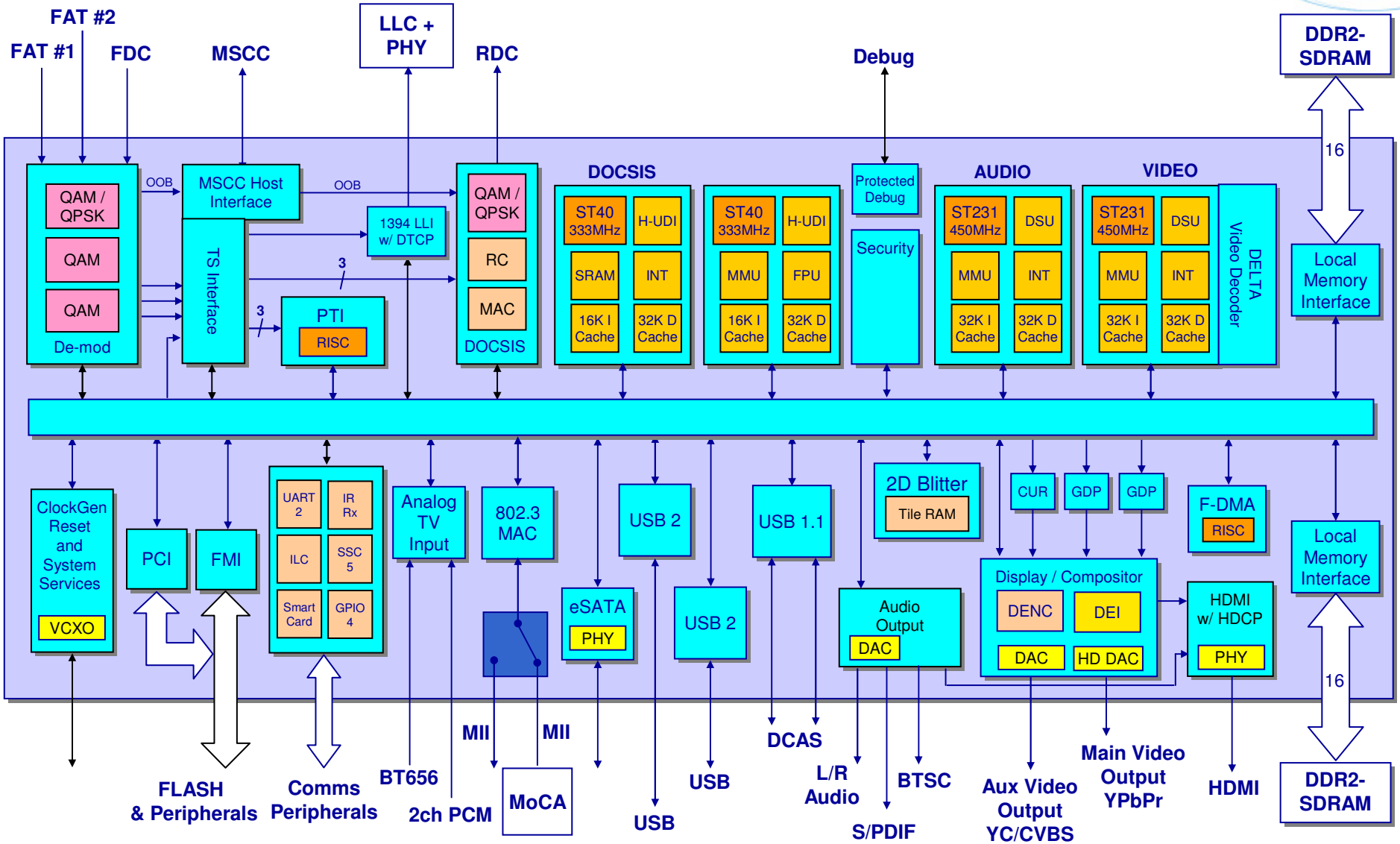

Summary

- Multicore systems are everywhere
  - Natural process of system integration
  - Smaller, faster, cheaper, …
- Concept is easy – just plug two (or more) together
  - Manufacturing can be costly
  - Software is a big challenge!
- Programmable cores offer great flexibility
  - Evolving standards
  - Workarounds