Everywhere you imagine. RENESAS

System Knowledge at a premium

Renesas Technology Europe
RTE-ED J. Brennan

©2009. Renesas Technology Europe Ltd., All rights reserved.

Renesas Background

©2009. Renesas Technology Europe Ltd., All rights reserved.

Renesas' focus is to take the power of computing "everywhere" to provide a true intelligent chip solution, creating a more convenient and safer environment for everyone.

Everywhere you imagine.

Name	**:** Renesas Technology Corp.
Head Office	**:** Tokyo, Japan
Established	**:** April 1, 2003
Business	**:** Development, design, manufacturing, sales and marketing of MCUs/MPUs, SoCs, logic and analog devices, discrete and mixed signal devices
Annual Sales	**:** ¥ 702.7 billion JPY in FY2008
Employees	**:** 25,000 as of March 2008 (consolidated)

Renesas Technology Europe, Engineering Division

System, SW, LSI & IP design for Automotive, Industrial & Consumer

Renaissance Semiconductor

for Advanced Solutions

©2009. Renesas Technology Europe Ltd., All rights reserved.

Systems knowledge will be the key to success.

©2009. Renesas Technology Europe Ltd., All rights reserved.

Are customers ready for Multi cores?

- Multi Processor systems have been around for a long time.
- Typical applications include TVs, Mobile Phones, Gaming consoles, Industrial machinery controls.
- Mobile phones are a great example of an embedded application constantly moving from multi processors to Multi-core devices .

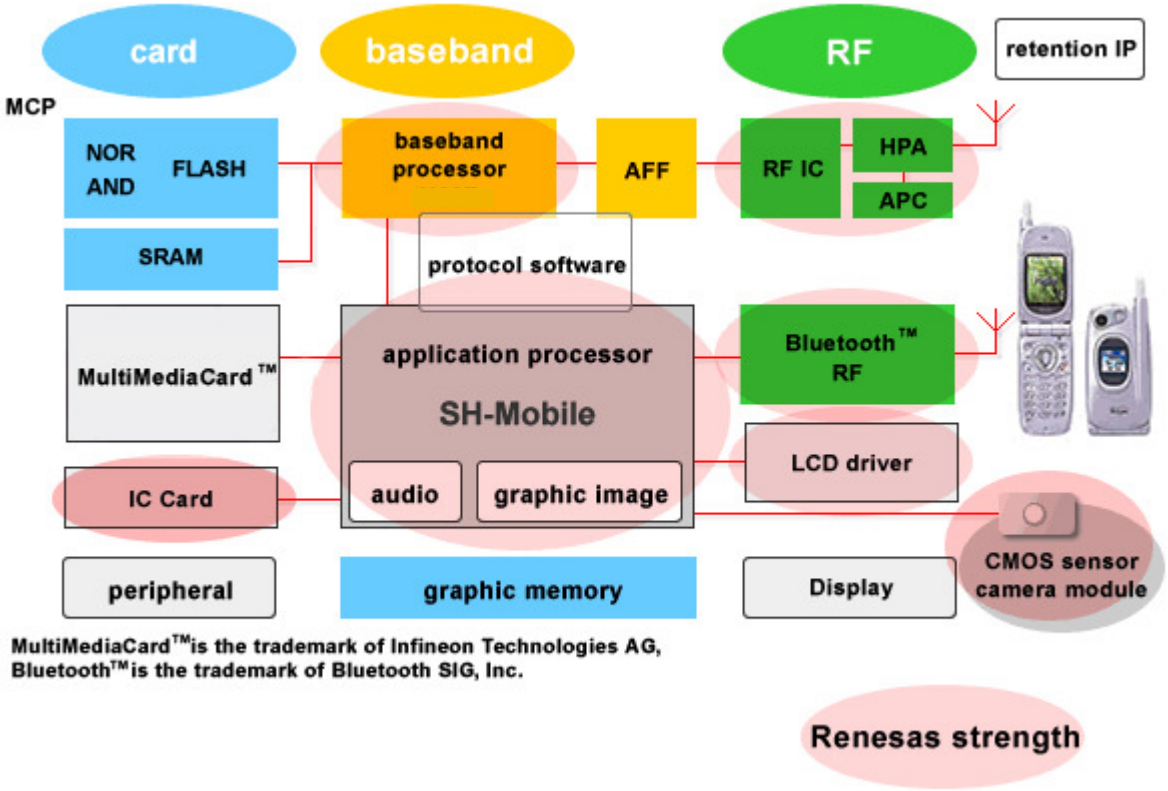

MultiMediaCard™ is the trademark of Infineon Technologies AG,
Bluetooth™ is the trademark of Bluetooth SIG, Inc.

©2009. Renesas Technology Europe Ltd., All rights reserved.

Looking at Mobile Phones

- Advent of “Multi-Media” has meant that Mobile phone makers have traditionally prolonged the life of existing platforms by adding Accelerators.
- Typically Graphics, Camera or Video accelerators to enhance the existing capabilities.
- Over time the accelerators are then added back into the Applications Processor.
- This has worked in the main but as LCD screens have got larger, Camera sensors bigger and Video frame-rate quicker then this approach is fraught with danger.
- Even a seemingly small change to move from a VGA to WVGA LCD means every display frame buffer has to increase by 150K Bytes
- One marketing man’s dream is a design engineer’s nightmare!

©2009. Renesas Technology Europe Ltd., All rights reserved.

Use case definition is crucial to success

- Are the customer's intentions clear enough?
- "Let's add HDMI out!"
- Questions that should be asked:
  - When HDMI is enabled will screen still be on?
  - Yes! OK does the on board LCD and TV have to be in perfect sync?
  - Yes! OK, Video was taken at 30fps but TV runs at 25 fps. So we also need to convert the frame rate.
  - Is it OK for TV to do up-scaling?
  - No! Do you realise that we then need 1 frame buffer for VGA LCD (600KBytes) and 1 for HDMI at 1080p (4050KBytes) and we need to convert the frame rate.
  - Can we increase the system Memory?

- Another good example of this is blending a menu over video. The cost in memory & performance of supporting full screen overlay is vast, but the requirement may be for just sub-titles, or partial menus.

Good Use case definition and interaction between the development team and customer can mean the difference between success and failure.

©2009. Renesas Technology Europe Ltd., All rights reserved.
Everywhere you imagine. RENESAS

Challenges facing System designers

- A new system architect, to a project, may not have knowledge of existing system and “features” of the design.
- Many projects evolve over time and lead to follow on projects.
- Was the system design ever updated in line with the changes to the project requirements?
- Legacy code: Code base for product variants is so large, there is no practical way to make significant changes for one project.
  - Engineers may by-pass Standard APIs during the performance tuning phase of a project.
  - Managers may not know that this has been done.
  - Implications for future projects may be lower priority.
- Use of existing applications on new platforms.
  - Users expect this but many older applications have “hidden” features. Like their own Graphic rendering engines.

- Late changes in requirements can have big system impacts.
- “Let’s add HDMI out!”

©2009. Renesas Technology Europe Ltd., All rights reserved.
Everywhere you imagine. RENESAS

Correct system design

- Analysis of data flows can have a significant impact on system performance.
- Screen sizes dictate some system design aspects.
  - Eg where an LCD is connected in the system can impact the system performance.
- With large screens you must have the Graphics engines near the drawing Core.
- Bandwidth calculations are needed to ensure that Data can be passed between Devices/Cores with margin.
- Depending on the final product spec it may be necessary to change the system set up between products in a family.

©2009. Renesas Technology Europe Ltd., All rights reserved.
Everywhere you imagine. RENESAS

What next?

- Renesas, like other Silicon suppliers, is introducing Multi-core devices into embedded markets.
- This means more Engineers will face the challenges described earlier.
- End users are expecting better user interfaces and want “iPhone” like views.
- Silicon vendors may solve some of the issues by tailoring solutions for applications.
- Customers are expecting Solutions
  - from Silicon vendors
  - from Systems Integrators
  - or elsewhere

©2009. Renesas Technology Europe Ltd., All rights reserved.

Multi-Core enters the Traditional Embedded markets

- **The Ideal device for combining real-time motor control and Simple Graphics into one controller device**

ADC and Timer for Motor Control

USB, CAN, SPI, SCI for Connectivity

Graphic drivers for Visualisation

SH7205 block diagram

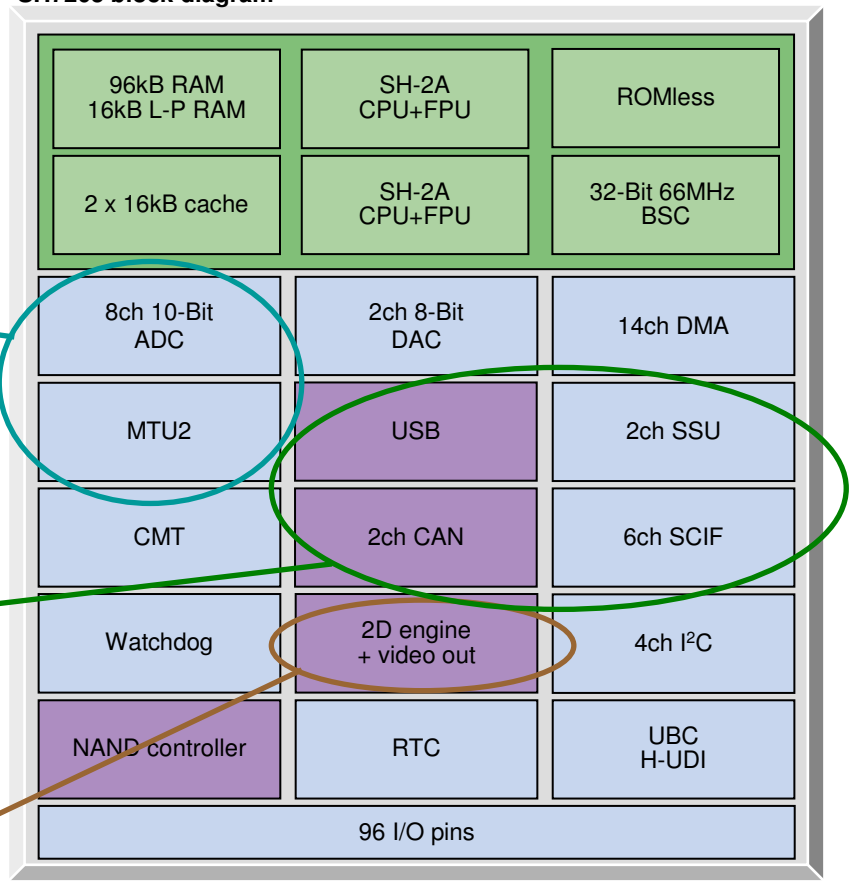

©2009. Renesas Technology Europe Ltd., All rights reserved.
Everywhere you imagine. RENESAS

Most Customers will start with AMP solutions.

(AMP = Asynchronous MultiProcessing)

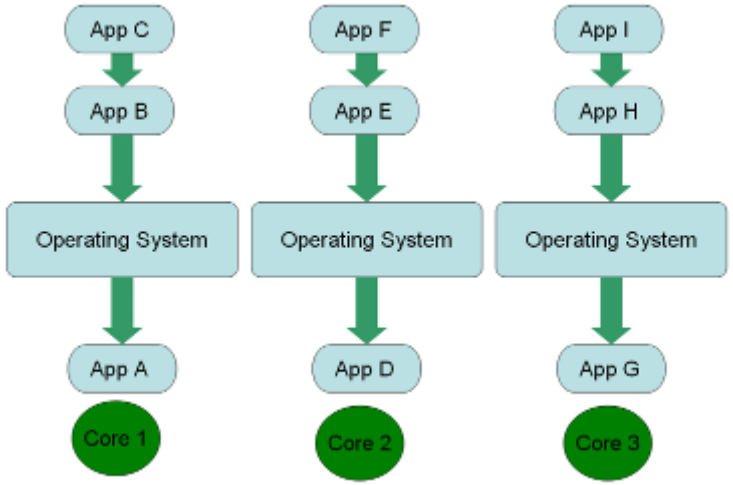

- Advantages
  - Use existing OS
  - Debugging is simpler
  - Operation is deterministic
  - Reuse of existing code, particularly control algorithms and sequencing.
  - System partitioning is straightforward:
    - Core 1 = real-time domain, Core 2 = UI and housekeeping

- Disadvantages
  - need know-how about partitioning code

©2009. Renesas Technology Europe Ltd., All rights reserved.
Everywhere you imagine. RENESAS

Summary

- Multiprocessor systems like mobiles will continue to lead the drive to Multi core devices.
- Systems knowledge and good Use-Case analysis will be at a premium to ensure that the products are delivered on time and spec.
- Traditional embedded markets are now being driven by “iPhone” type User interfaces towards Multi-core devices and longer battery life expectations.

©2009. Renesas Technology Europe Ltd., All rights reserved.

RENESAS

Renesas Technology Europe

©2009. Renesas Technology Europe Ltd., All rights reserved.